NOTES:

1. APPLICABLE STANDARDS / SPECIFICATIONS:
   A. DOD-STD-001000 (AR)
   B. ANSI Y14.5M-1982
2. WELD IN ACCORDANCE WITH MIL-STD-1946, METHOD A OR B.
3. (3) INSTALL AFTER MACHINING CUPOLA BODY.
4. WELD SIZES ARE MINIMUM.

ZONE	REV	REVISION	APP	DATE
	-	INITIAL RELEASE (VSE 7[illegible])		
A04	A	(1) THRU (5) CHANGED DIM. IN ZONES D3, C3, D2, C2 (6) CHANGED VIEW PICTORIALLY AND ADDED WELD CALLOUT AND DIM.		
C3		(7) CHANGED WELD CALLOUT		
D1		(8) CHANGED WELD CALLOUT		
C2		(9) CHANGED DIM. (VSE A7605)		
B3	B	(1) CHANGED HANDLE CALLOUT (VSE T10971)		

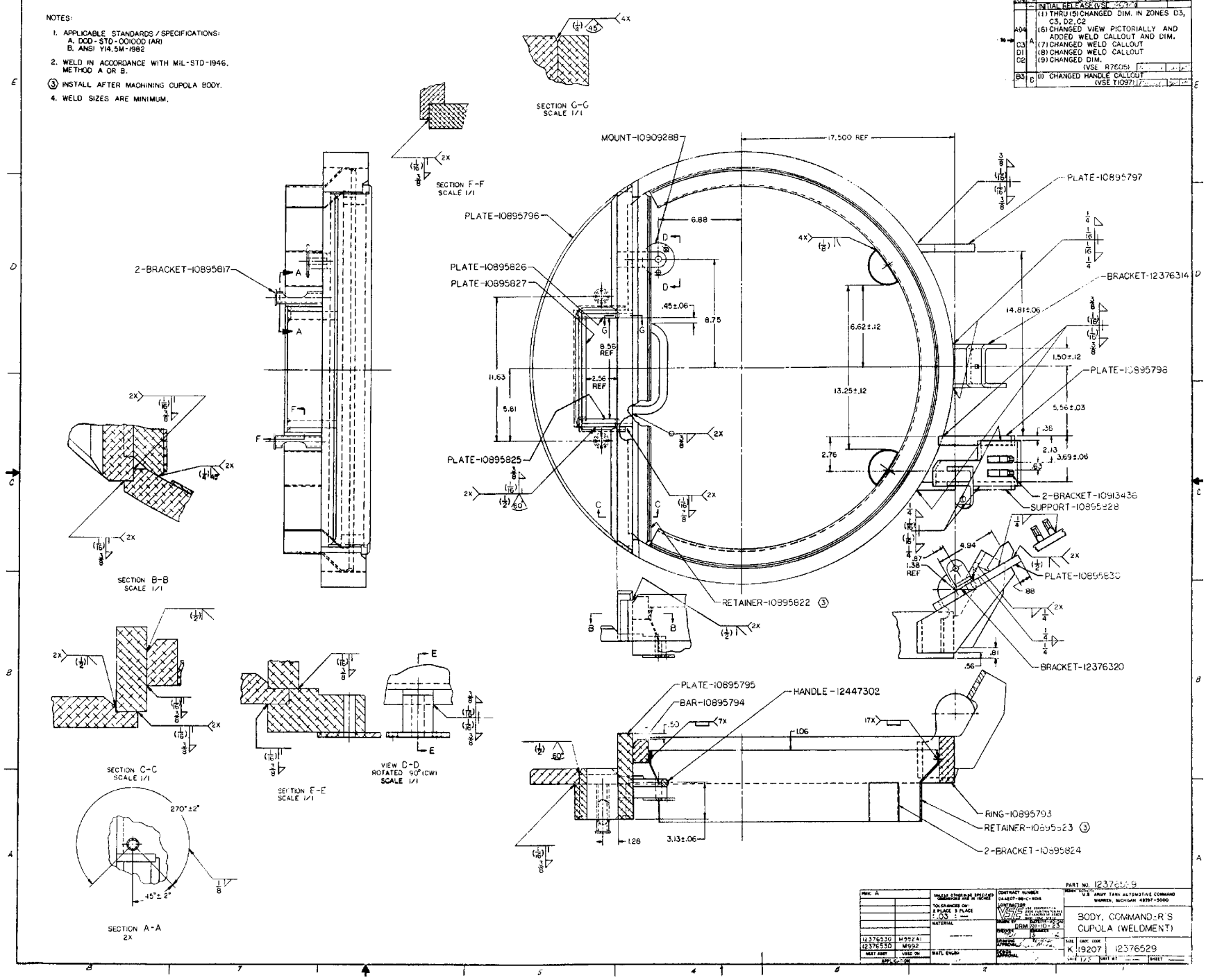

MFG A	UNLESS OTHERWISE SPECIFIED DIMENSIONS ARE IN INCHES	CONTRACT NUMBER DAAE07-88-C-R068	PART NO. 12376529
	TOLERANCES ON: 2 PLACE ± .03 3 PLACE ± .005	CONTRACTOR VSE CORPORATION 2360 CORPORATE CIRCLE GREENSBORO, NORTH CAROLINA 27408	REQUIRING ACTIVITY U.S. ARMY TANK AUTOMOTIVE COMMAND WARREN, MICHIGAN 48397-5000
	MATERIAL	DRAWN BY DRM 01-10-23	BODY, COMMANDER'S CUPOLA (WELDMENT)
12376530 M992A1		CHECKED BY	
12376530 M992		ENGINEER	
NEXT ASSY	USED ON		SIZE K CAGE CODE 19207 12376529
	MATL ENGRG		SCALE 1/5 UNIT WT SHEET
	APPLICATION		