UDLP/TACOM Ground Combat Vehicle Welding Code — Aluminum

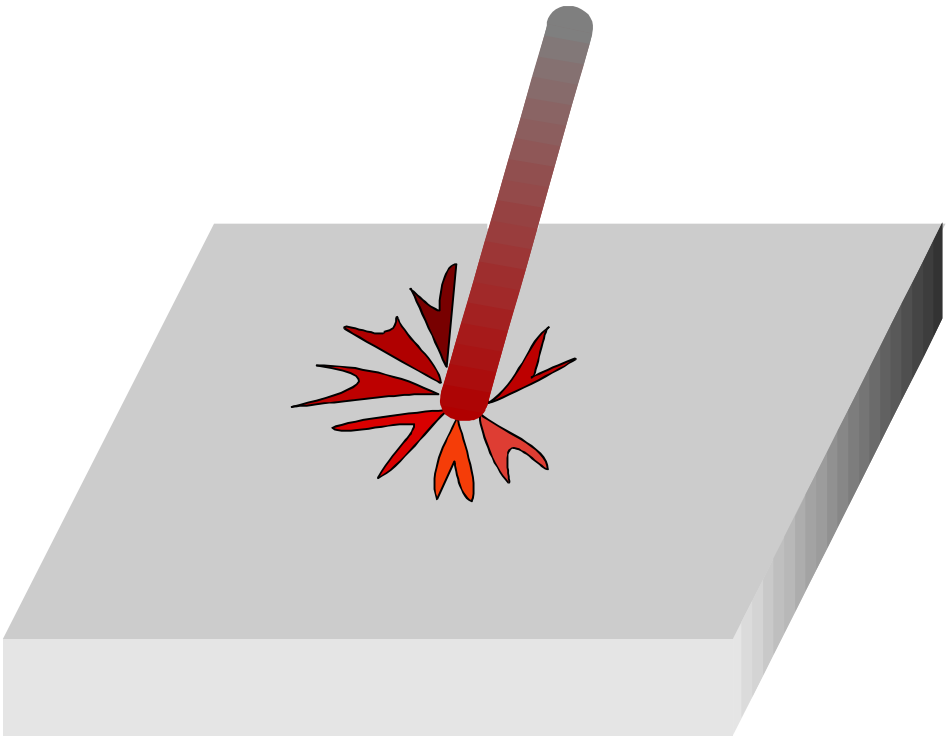

IMPORTANT

This document contains “hot links” that will allow quick searches and access to information.

The mouse pointer is a “grabber hand” **in this document. It changes to a pointing finger** **whenever you scan over a word or phrase that is linked to text, a figure, or a table somewhere else in this document. Notice, as you scan over a page the pointer will change back and forth between the grabber hand and the pointing finger. Click the mouse to move to the linked site.**

After you have jumped to a linked site, you easily return to the location you clicked from by clicking on the double return arrows

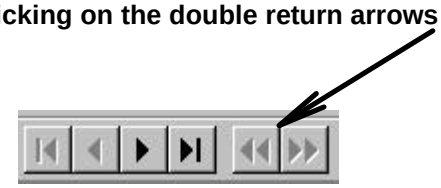

Preface

Format

This document follows the AWS format, and is based on the current practice in the manufacture of ground combat vehicles. Therefore, the section that normally would be included to establish design standards has been eliminated from this code. This follows the practice within this industry of having design performed by structural design engineers using the latest in finite element analysis techniques.

This code has been divided into 9 sections (sections 1 through 10, with section 2, normally applied to design, eliminated) that can be grouped into the following areas related to welding manufacture:

- General welding procedural requirements for the qualification of welding processes and weld joint geometries.
- Specific requirements for qualifying welders for various welding processes.
- Specific requirements for welds in four different categories:
  - Stud Welding
  - Non-Critical Welding
  - Critical Welding (Except Ballistic Structures)
  - Ballistic Welding

Generally, the requirements for welds in the latter three categories can be related to the prior military specifications, as follows:

- Quality standards of Section 8, related to welding attachments, is based upon MIL-STD-372, Class B.
- Quality standards of Section 9, related to welding primary nonballistic structures, is based upon MIL-STD-372, Class A.
- Quality standards of Section 10, related to welding structures subject to ballistic attack, is based upon MIL-STD-1946.

For simplicity, this document can be divided into separate *working* sections. Sections 7 through 10 describe the requirements for specific weld categories and should be used to control welding of these *individual* categories. They should be used in conjunction with Section 6 which establishes basic quality procedures.

Sections 1 through 5, excluding the nonexistent Section 2, establish the general workmanship and technique requirements for all aluminum welding. It also establishes the qualification of procedures and of welders. These sections produce the framework for good welding performance in any facility fabricating components for our country's defense. They must be followed for the establishment of an acceptable facility with welders capable of performing the welding needed for this fabrication.

Revisions

This document has been designed to be accessed on-line. Any hard copy printed from this file *MUST* be considered an uncontrolled document.

This has been designed to be a living document which can be revised upon agreement of all parties to it. Recommendations for change will always be considered by the committee responsible for maintaining the document.

Acknowledgment

This code is based on the American Welding Society's ANSI/AWS D1.2 Structural Welding Code - Aluminum.

This document was prepared by a team from the U.S. Army's Armament Research, Development and Engineering Center in Dover, NJ, the U.S. Army's Tank-Automotive and Armament Research, Development and Engineering Center in Warren, MI, and United Defense, L.P.'s Ground Systems Division's; Aiken, SC, San Jose, CA and York, PA sites.

TABLE OF CONTENTS

Preface *3*
List of Tables *9*
List of Figures *11*

1 GENERAL PROVISIONS 13

1.1 Scope 13
1.2 Approval 13
1.3 Materials 13
1.4 Welding Processes 16
1.5 Equipment Calibration 16
1.6 Definitions 16
1.7 Welding Symbols 16
1.8 Safety Precautions 17
1.9 Standard Units Of Measurement 17

3 WORKMANSHIP 19

3.1 General 19
3.2 Preparation Of Base Material 19
3.3 Assembly 21
3.4 Control Of Distortion And Shrinkage 22
3.5 Weld Profiles 22
3.6 Rework/Repairs 23
3.7 Cleaning Of Completed Welds 24

4 TECHNIQUE 25

Part A General Requirements For Gas Metal Arc, Gas Tungsten Arc, Plasma Arc (Variable Polarity) Welding 25

4.1 Material Requirements 25
4.2 Welding Processes 25
4.3 Shielding Gases 25
4.4 Preheat Requirements 25
4.5 Interpass Temperature Requirements 25
4.6 Arc Strikes 25
4.7 Cleaning Prior To Welding` 25
4.8 Weld Termination 25
4.9 Backing To Prevent Melting Through 26
4.10 Peening 26
4.11 Thermal Stress-Relief Treatment 26

Part B Gas Metal Arc Welding 26

4.12 General 26
4.13 Restrictions On Gas Metal Arc Welding With Single Electrode 26

Part C General Requirements Gas Tungsten Arc Welding 27

4.14 General 27
4.15 Tungsten Electrodes 27
4.16 Restrictions On Gas Tungsten Arc Welding 28

Part D Plasma Arc Welding 28

4.17 General 28
4.18 Tungsten Electrodes 28
4.19 Restrictions On Variable Polarity Plasma Arc Welding 28

5 QUALIFICATIONS OF PROCEDURES AND PERSONNEL 29

Part A General Requirements 29

5.1 General 29
5.2 Qualification Of Welding Procedures 29
5.3 Qualification Of Welders, Welding Operators, And Tack Welders 29
5.4 Qualification Responsibility 29
5.5 Records 29
5.6 Position Of Test Welds 29

Part B Types of Tests, Test Methods and Acceptance Criteria 35

5.7 Types And Purposes Of Tests 35
5.8 Visual Examination 36
5.9 Tension Tests — Groove Welds 36
5.10 Bend Tests — Groove Welds — Plate And Pipe 37
5.11 Soundness Tests — Fillet Welds 43
5.12 Radiographic Examination 44

Part C Procedure Qualification 46

5.13 General 46
5.14 Limits Of Qualified Positions For Procedures 46
5.15 Preparation Of Test Weldment — Procedure Qualification 48
5.16 Limitation of Variables — Procedure Qualification 48
5.17 Tests — Procedure Qualification 50
5.18 Retests 55

Part D Performance Qualification 55

5.19 General 55
5.20 Limits of Qualified Positions for Performance 55
5.21 Preparation of Test Weldments — Performance Qualification 58
5.22 Limitation of Variables — Welder Performance Qualification 60
5.23 Limitation of Variables — Welding Operator Performance Qualification 60
5.24 Limitation of Variables — Tack Welder Performance Qualification 60
5.25 Tests — Performance Qualification 62
5.26 Retests 63
5.27 Period of Effectiveness 63

6 INSPECTION 67

Part A General Requirements 67

6.1 General 67
6.2 Inspection of Materials 67
6.3 Inspection of Welding Procedure Qualification and Equipment 67
6.4 Inspection of Welder, Welding Operator, and Tack Welder Qualifications 68
6.5 Inspection of Work and Records 68
6.6 Obligations of the Contractor 68
6.7 Nondestructive Testing 68

Part B Radiographic Inspection 69

6.8 General 69
6.9 Extent of Testing 69
6.10 Radiographic Procedures 69
6.11 Acceptability of Welds 73
6.12 Examination, Report, and Disposition of Radiographs 73

Part C Ultrasonic Testing of Groove Welds *73*
6.13 General 73
7 STUD WELDING 75
Part A General Requirements *75*
7.1 General 75
Part B Arc Stud Welding *75*
7.2 General Requirements 75
7.3 Material Requirements 75
7.4 Workmanship 75
7.5 Technique 76
7.6 Qualification Requirements 76
7.7 Operator and Preproduction Qualification 78
7.8 Acceptance Criteria — Production Welds 78
7.9 Mislocated Studs 78
7.10 Repair of Misapplied Studs 78
Part C Capacitor Discharge Stud Welding *79*
7.11 General Requirements 79
7.12 Material Requirements 79
7.13 Workmanship 79
7.14 Technique 79
7.15 Qualification Requirements 79
7.16 Operator and Preproduction Qualification 81
7.17 Acceptance Criteria — Production Welds 81
7.18 Mislocated Studs 81
7.19 Repair of Misapplied Studs 81
8 NON-CRITICAL WELDING 83
Part A General Requirements *83*
8.1 Application 83
8.2 Base Metal 83
8.3 Filler Metal 84
Part B Workmanship *84*
8.4 Dimensional Tolerances 84
8.5 Temporary Welds 84
8.6 Weld Termination 84
8.7 Quality of Welds 84
9 CRITICAL WELDING (Except Ballistic Structures) 87
Part A General Requirements *87*
9.1 Application 87
9.2 Base Metal 87
9.3 Filler Metal 87
Part B Workmanship *88*
9.4 Dimensional Tolerances 88
9.5 Temporary Welds 88
9.6 Weld Terminations 88
9.7 Quality of Welds 88

10 BALLISTIC WELDING 91

Part A General Requirements 91

10.1 Application 91
10.2 Base Metal 91
10.3 Filler Metal 91

Part B Workmanship 91

10.4 Temporary Welds 91
10.5 Weld Terminations 91
10.6 Ballistic Certification 91
10.7 Macro Specimens 93
10.8 Quality of Welds 93
10.9 Ballistic Shock Test Procedure 95

APPENDICES 99

APPENDIX A – STANDARD FORMS 101

APPENDIX B – WELD TYPES 119

LIST OF TABLES

Table

1.1 Aluminum Alloy Products Available for Structural Applications 14
1.2 Recommended Aluminum Alloy Filler Metals for Structural Welding of Various Aluminum Alloys 15
3.1 Limit of Acceptability and Repair of Cut Edge Discontinuities in Plate 20
4.1 Typical Current Ranges for Tungsten Electrodes 27
4.2 Typical Chemical Composition of Tungsten Electrodes 28
5.1 Tensile Strength of Welded Aluminum Alloys (GTAW or GMAW With No Postweld Heat Treatment) 40
5.2 Procedure Qualification - Type and Position Limitations 50
5.3 Number and Type of Test Specimens and Range of Thickness Qualified — Procedure Qualification; Complete Joint Penetration Groove Welds 52
5.4 Number and Type of Test Specimens and Range of Thickness Qualified—Procedure Qualification; Partial Joint Penetration Groove Welds 54
5.5 Number and Type of Test Specimens and Range of Thickness Qualified —Procedure Qualification Fillet Welds 57
5.6 Welder Performance Qualification—Type of Weld and Position Limitations 58
5.7 Number and Type of Test Specimens and Range of Thickness Qualified Welder and Welding Operator Qualification 64
6.1 Penetrameter Requirements 70
7.1 Minimum Fillet Weld Size for Small Diameter Studs 76
7.2 Minimum Required Torque Values and Tension Loads for Arc Stud Welding (F-22 Aluminum Alloy Studs) 77
7.3 Minimum Required Torque Values and Tension Loads for Capacitor Discharge Stud Welding (F-22 Aluminum Alloy Studs) 80
9.1 Maximum Acceptable Porosity in Radiographs for Any 3 in. Length of Weld (Dynamically Loaded) 89
10.1 Sample Inspection Frequency Table 95
10.2 “Consecutives” Table for Random Positions 95
10.3 Striking Velocity Requirements for 5083 Aluminum Alloy Using the 75 mm Aluminum M1002A Plate Proofing Projectile 97
10.4 Striking Velocity Requirements for 7039 Aluminum Alloy Using the 75-mm Aluminum, M1002A Plate Proofing Projectile 97
10.5 Striking Velocity Requirements for 5083 Aluminum Alloy Using the 57-mm Aluminum M1001A Plate Proofing Projectile 97
10.6 Striking Velocity Requirements for 7039 Aluminum Alloy Using the 57-MM Aluminum M1001A Plate Proofing Projectile 97
10.7 Striking Velocity Requirements for 2519 Alloy Aluminum Armor Weldments Using the 75-mm, M1002A Aluminum Plate Proofing Projectile 97

LIST OF FIGURES

Figure

3.1 Edge Discontinuities in Cut Plate....21
3.2 Maximum Allowable Root Opening....22
3.3 Acceptable and Unacceptable Weld Profiles....23
5.1 Positions of Groove Welds....30
5.2 Positions of Fillet Welds....31
5.3 Position of Test Plates for Groove Welds....32
5.4 Position of Test Plates for Pipe or Tubing for Groove Welds....33
5.5 Position of Test Plates for Fillet Welds....34
5.6 Position for Test Pipes for Fillet Welds....35
5.7 Reduced Section Tension Specimens — Plate and Tubing....38
5.9 Alternate Reduced Section Tension Specimen for Pipe [3 in. (75 mm) Diameter or Less....39
5.10 Full Section Tension Specimens — Small Diameter Pipe [3 in. (75 mm) Diameter or Less]....39
5.11 Transverse Side Bend Specimens....41
5.12 Transverse Face- and Root-Bend Specimens....42
5.13 Longitudinal Face- and Root-Bend Specimens....43
5.14 Plunger-Type Guided Bend Jig....44
5.15 Roller-Type Guided Bend Jig....45
5.16 Wrap-Around Guided Bend Jig....47
5.17 Fillet Weld Soundness Test for Procedure Qualification — Option 1 — Plate....47
5.18 Fillet Weld Soundness Test for Procedure Qualification — Option 1 — Pipe....48
5.19 Fillet Weld Soundness Test for Procedure Qualification — Option 2 — Root Bend Test — Plate....49
5.20 Location of Test Specimens for Procedure Qualification — Plate....53
5.21 Location of Test Specimens on Welded Test Pipe....54
5.22 Location of Test Specimens for Square and Rectangular Tubing....54
5.23 Location of Test Specimens for Job Size Pipe or Tubing 1/16 in. through 3/8 in. Wall Thickness....56
5.24 Location of Test Specimens for Job Size Pipe or Tubing Over 3/8 in. Wall Thickness....56
5.25 Test Plate for Unlimited Thickness — Performance Qualification — Option 1 — All Positions....59
5.26 Test Plate for Unlimited Thickness — Option 2 — Horizontal Position Only....60
5.27 Test Plate for Limited Thickness — All Positions — Performance Qualification....61
5.28 Optional Test Plate for Limited Thickness — Horizontal Position — Performance Qualification....61
5.29 Tubular Groove Weld — Performance Qualification — Without Backing....61
5.30 Tubular Groove Weld — Performance Qualification — Without Backing (Alternative to Figure 5.29)....61
5.31 Tubular Groove Weld — Performance Qualification With Backing....62
5.32 Test Joint for T-, Y-, and K-connections on Pipe or Square or Rectangular Tubing — Performance Qualification....62
5.33 Test Weldment for Fillet Welds Only — Performance Qualification — Option 1....62
5.34 Location of Test Specimens on Welded Test Pipe and Square and Rectangular Tubing — Performance Qualification`....65
6.1 Radiographic Identification and Penetrameter Locations on Approximately Equal Thickness Joints....71
6.2 Radiographic Identification and Penetrameter Locations on Transitions Joints....71
6.3 Penetrameter Design....72
7.1 Stud Welding Bend Jig....77
7.2 Torque Testing Arrangement For Stud Welds....77
8.1 Permissible Undercut Values....84
8.2 Permissible Cracks the Stop Region of a Weld....85
10.1 Example of Specimen Size, or Orientation, and Markings for Ballistic Test....92

UDLP/TACOM
Ground Combat Vehicle Welding Code — Aluminum
July, 1996

1. General Provisions

1.1 Scope

This Code covers welding requirements applicable to welding ground combat aluminum alloy structures and components. It is to be used in conjunction with appropriate complementary codes or specifications for materials design and construction. It is not intended to supplant codes developed for use in specialized fabrication, such as the ASME Boiler and Pressure Vessel Code, or aerospace codes; it is appropriate for use in fabrication of ballistic and nonballistic primary structures, supporting structures and appurtenances. Requirements that are essentially common to all types of structures are covered in sections 1 through 7, while provisions relating exclusively to quality requirements based upon the intended use of the weldments are included in sections 8, 9 and 10.

1.2 Approval

All reference to a need for approval shall be interpreted to mean approval by the Government, or the duly designated person who acts for and on behalf of the Government in all matters within the scope of this code.

In addition, where Contractor approvals shall be required, the term Contractor shall refer to the appropriate Prime Contractor Weld Engineering and/or Quality Engineering personnel.

1.3 Materials

1.3.1 Base Metals

1.3.1.1 Aluminum alloys approved for use in this code are listed under ASTM and former military specifications, as appropriate, in Table 1.1. Other aluminum alloys may be used only when approved by the Government or listed as an alternate in the Technical Data Package (TDP).

1.3.1.2 To reduce the number of welding procedure qualifications required, the following groupings of base materials listed in Table 1.1 have been established. They are based essentially on comparable base metal characteristics, such as composition, weldability, and mechanical properties:

M-Number Listing	
M21 –	1060, 1100, ALCLAD 3003, 5005 5050
M22 –	3004, ALCLAD 3004, 5052, 5254, 5456, 5652
M23 –	6005, 6061, ALCLAD 6061, 6063, 6351
M24 –	2219
M25 –	5083, 5086, 5456
M26 –	A201.1, 354.0, 355.0, 356.0, A356.0, 357.0, A357.0, 359.0, 514.0, 535.0
M27 –	7005, 7039

1.3.2 Filler Metals

1.3.2.1 Filler metals shall comply with all the requirements set forth in the latest edition of ANSI/AWS A5.10, *Specification for Bare Aluminum and Aluminum Alloy Welding Electrodes and Rods.* Table 1.2 lists filler alloys recommended for use with pertinent base aluminum alloys for general structural applications.

Table 1.1
Aluminum Alloy Products Available for Structural Applications (see 1.3.1.1)

Alloy No.[1]	Sheet and Plate ASTM B209	Rolled Cold Finished Rod, Bar, and Wire ASTM B211	Extruded Rod, Bar, Wire and Shapes ASTM B221	Rolled or Extruded Structural Shapes ASTM B308	Seamless Extruded Tube and Pipe ASTM B241	Seamless Extruded Tube and Pipe ASTM B429	Seamless Drawn Tube and Pipe ASTM B210	Seamless Drawn Tube and Pipe ASTM B483	Welded Tube ASTM B313	Welded Fittings ASTM B361	Forgings ASTM B247	Sand Castings ASTM B26	Permanent Mold Castings ASTM B108	Investment Castings ASTM B618	High Strength Castings ASTM B686
Wrought Alloys															
AA 1060	X	X	X		X		X	X		X					
AA 1100	X	X	X		X		X	X	X	X	X				
AA 2219	[X][2]	[X]	[X]		[X]						[X]				
AA 2519	(ref MIL-A-[TBD])														
AA 3003	X	X	X		X		X	X	X	X	X				
Alclad	X		X		X		X			X					
3003	X		X						X						
AA 3004															
AA 5052	X	X	X		X		X	X	X						
AA 5083	X		X		X		X			X	X				
AA 5086	X		X		X		X		X	X					
AA 5154	X	X					X		X	X					
AA 5254	X		X		X										
AA 5454	X		X		X										
AA 5456	X		X		X		X								
AA 5652	[X]				[X]										
AA 6005			X												
AA 6061	X	X	X	X	X	X	X	X	[X]	X	X				
Alclad	X														
6061			X		X	X	X	X		X					
AA 6063															
AA 6351			X		[X]										
AA 7005			X												
7039	(ref MIL-A-46063)														
Cast Alloys															
AA A201.0															[X]
AA 354.0													[X]		[X]
AA C 355.0												[X]	[X]	[X]	[X]
AA 356.0												X	X	[X]	
AA 356.0												[X]	[X]	[X]	[X]
AA 357.0													[X]		
AA A357.0													[X]		[X]
AA 359.0													[X]		
AA 443.0												X	X	[X]	
AA 514.0												[X]		[X]	
AA535.0												[X]	[X]	[X]	

Notes:
1. Wrought Alloys 1xxx, 3xxx, 5xxx, and cast alloys 4xx.x and 5xx.x are nonheat treatable alloys. Wrought alloys 2xxx, 6xxx, and 7xxx and cast alloys x2xx.x and x3xx.x are heat treatable alloys.
2. [X] indicates a revision to ANSI/AWS D1.2-83

AA = Aluminum Association No.

1.3.2.2 The filler metals listed below have been arranged in the following F number groups based upon their usability characteristics.

These groupings do not imply that filler metals within the same F number grouping may be interchanged without consideration of compatibility from the standpoints of metallurgical and mechanical properties, design and service requirements, and without the approval of the Government.

1.3.2.3 Filler metals shall be stored in their original packages or cartons, in a dry place adequately protected from the weather until actually needed at the fabrication site. Recommendations of the manufacturer concerning special protection during storage and use shall be explicitly followed.

Group Designation	AWS Electrode Classification
F21	ER1100, ER1188, R1100, R1188
F22	ER5183, ER5356, ER5554, ER5556, ER5654, R5183, R5356, R5554, R5556, R5654
F23	ER4043, ER4047, ER4145, ER4643, R4043, R4047, R4145, R4643
F24	R206.0, R357.0, R-A356.0, R-A357.0, R-C355.0
F25	ER2319, R2319

Table 1.2*
Recommended Aluminum Alloy Filler Metals for Structural Welding of Various Base Aluminum Alloys (see 1.3.1.1)

Base Metal to → Base Metal ↓	1060 1100 3003 Alclad 3003	2219 A201.1	3004 Alclad 3004	5005 5050	5052 5652[3]	5083 5456	5086 514.0 535.0	5154 5254[3]	5454	6005 6061 Alclad 6061 6063 6351	7005	354.0 C354.0	356.0 A356.0 357.0 A357.0 359.0 443.0
356.0, A356.0, 357.0, A357.0, 359.0, 443.0	4043 (8)	4145 (5),(8)	4043 (8)	4043 (8)	4043 (4),(8)	5356 (7)	5356 (7)	4043 (4)	4043 (4)	4043 (8),(9)	4043 (8)	4145 (5),(6),(8)	4043 (6),(8),(9)
354.0, C355.0	4145 (5),(8)	4145 (5),(8),(10)	4145 (5),(8)	4145 (5),(8)	4043 (8)	NR	NR	NR	4043 (8)	4145 (5),(8)	4145 (5)(8)	4145 (5),(6),(8)	
7005	5356 (5),(7)	4145 (5),(8)	5356 (5),(7)	5356 (5),(7)	5356 (4)	5556 (7)	5356 (7)	5356 (4)	5356 (4)	5356 (4),(5),(8)	5356 (7)		
6005, 6061, Alclad 6061, 6063, 6351	4043 (8)	4145 (5),(8)	5356 (4),(5)	4043 (7),(8)	5356 (4),(5)	5356 (7)	5356 (7)	5356 (4)	5356 (4),(5)	4043 (4),(8),(13)			
5454	4043 (7),(8)	4043 (8)	5356 (4),(5)	5356 (4),(5)	5356 (4),(5)	5356 (7)	5356 (7)	5356 (4)	5554 (5),(7),(8)				
5154, 5254[3]	4043 (7),(8)	NR	5356 (4)	5356 (4)	5356 (4)	5356 (7)	5356 (7)	5356 (4)					
5086, 514.0, 535.0	5356 (7)	NR	5356 (7)	5356 (7)	5356 (7)	5356 (7)	5356 (7)						
5083, 5456	5356 (7)	NR	5356 (7)	5356 (7)	5356 (7)	5556 (7)							
5052, 5652[3]	4043 (7),(8)	4043 (8)	4043 (7),(8)	4043 (7),(8)	5356 (4),(5)								
5005, 5050	4043 (8),(11)	4145 (5)	4043 (7),(8)	4043 (8),(11)									
3004, Alclad 3004	4043 (7),(8)	4145 (5)	4043 (7),(8)										
2219, A201.1 2519	4145 (5),(8)	2319 (5),(8),(9)											
1060 1100 3003, Alclad 3003	1100 (5),(6),(8),(12)												

Notes:
1. The filler metal shown for each combination of base alloys is that most commonly used. However, the specific filler metal depends upon usage and type of joint, and in a number of cases, acceptable alternates are recommended. [Notes (4) – (13)]. When NR is indicated, welding that combination of base alloys is not recommended.
2. Filler metals conform to the requirements of ANSI/AWS A5.10.
3. Exposure to specific chemical, or a sustained high temperature [over 150ºF (66ºC)] may limit the choice of filler metals. Filler alloys 5183, 5356, 5556, and 5654 should not be used for sustained elevated temperature service. Filler alloy 5654 is suitable for use with base alloys 5652 and 5254 for hydrogen peroxide service.
4. 5183, 5356, 5554, and 5654 may be used. In some cases, they provide (1) improved color match after anodizing treatment, (2) higher weld ductility, and (3) higher weld strength. 5554 is suitable for elevated temperature service.
5. 4043 may be used for some applications.
6. Filler with the same analysis as the base metal alloy is sometimes used/
7. 5183, 5356, or 5556 may be used.
8. 4047 may be used for some applications.
9. 4145 may be used.
10. 2319 may be used.
11. 1100 may be used.
12. 1188 may be used.
13. 4643 may be used. This is useful primarily when 1/2 inch (12.7 mm) and thicker weldments are post weld solution heat treated and precipitation age hardened.

* In addition to these alloys, 7039 aluminum armor may be welded to itself, or to 5083 or 5086 alloys using 5356 filler metal.

1.3.3 Shielding Gases

1.3.3.1 The shielding gas in conventional welding of aluminum shall be welding-grade argon, complying with CGA specification Grade C minimum. Where special circumstances exist, i.e., the need for deep penetration (as in welding very thick sections), the use of welding-grade helium or a mixture of welding grade argon and welding-grade helium may be used in accordance with the requirements of section 5.16.

1.3.3.2 Shielding gases shall be stored in and used from the containers in which they are supplied or from a central storage tank distribution system which is replenished by the gas supplier. The entire handling system shall be designed to prevent contamination.

1.4 Welding Processes

This code covers the requirements for welding aluminum alloys by the following processes:

(1) GMAW — gas metal arc welding

(2) GMAW-P— pulsed gas metal arc welding

(3) GTAW — gas tungsten arc welding

(4) PAW-VP — plasma arc welding with variable polarity.

(5) SW — stud welding

(6) GMAW-AU, -ME, and -RO — automatic, mechanized, or robotic gas metal arc welding

The welding procedures for these processes shall comply with the provisions of sections 1 through 5 and, in addition, sections 8, 9, or 10, as applicable.

1.5 Equipment Calibration

The manufacturer is required to develop and maintain a welding equipment calibration program. This program shall consist of, as a minimum, an annual comparison check of the machine output with instrumentation calibrated using standards traceable to the National Institute of Standards and Technology (NIST). The standard may be a load bank, voltmeter/ammeter, clamp-on meter, etc.

Machine output for amperage and voltage must be within ± 10% of full scale. Proper documentation and evidence of the implementation must be maintained and is subject to random audit. If leads are in excess of 10 ft. in length, calibration will be performed at the nozzle. Either gage correction or a conversion chart will be used.

1.6 Definitions

The welding terms used in this Code shall be interpreted in accordance with the definitions given in the latest edition of ANSI/AWS A3.0, *Standard Welding Terms and Definitions.*

Terms not included in ANSI/AWS A3.0 are defined below:

Reenetrant corner – A corner directed inward (as opposed to an outside corner)

Fins – Metal on a casting caused by an imperfect mold or die

Flange – A rib or rim provided for strength, for guiding, or for attachment to another object

Transition area – An area in which the thickness varies from thicker to thinner

Shrinkage – A shrinkage crack

Cope holes – A hole formed to conform to the shape of another member

Bearing joint – Welded joint positioned to absorb the load

Faying surfaces – The mating surface of a member that is touching or in close proximity to another member to which it is to be joined

Built-up members – A member that has been clad, buttered, or in some way built up with weld metal

Modified PQR – A PQR that has been developed from existing procedures qualified from a welding military standard or specification, and grandfathered into an AWS PQR format

Modified WPS – A WPS that has been created from a modified PQR(s) developed from an existing workmanship sample per MIL-STD or specification.

1.7 Welding Symbols

Welding symbols used in drawings, sketches, erection plans, procedure specifications, etc., shall be those shown in the latest edition of ANSI/AWS A2.4, *Symbols for Welding, Brazing, and Nondestructive Examination.* Special

conditions shall be fully explained by added notes or details.

1.8 Safety Precautions

Note: This Code may involve hazardous materials, operations,. and equipment. The Code does not purport to address all of the safety problems associated with its use. It is the responsibility of the user to establish appropriate safety and health practices. The user should determine the applicability of any regulatory limitations prior to use.

Adequate safety precautions, including ventilation of the work area shall be taken in accordance with the requirements of the latest edition of ANSI/ASC Z49.1, Safety in Welding and Cutting.

1.9 Standard Units of Measurement

The values stated in U.S. customary units are to be regarded as the standard..

3. Workmanship

3.1 General

3.1.1 All applicable subsections in this section shall be adhered to in the production and inspection of welded assemblies and structures produced under this Code.

3.1.2 All welding and cutting equipment shall be so designed and manufactured and shall be maintained in such operating condition that qualified welders, welding operators and tack welders are able to follow the procedures and attain the results prescribed elsewhere in this Code.

3.1.3 Welding shall not be done when the parent metal temperature is lower than 55° F. This does not mean the ambient environmental temperature, but the temperature in the immediate vicinity of the weld. If the ambient environmental temperature is below 32° F, a heated structure or shelter may be provided which will maintain the temperature adjacent to the weldment at 55° F or higher. When the temperature of the weld area and surrounding base metal is below the allowed minimum temperature, the base metal shall be preheated, but not to exceed 250° F, so that the parts on which weld metal is being deposited are at, or above, the allowed minimum temperature for a distance equal to the thickness of the parts being welded, but not less than 3 in. both laterally and in advance of the welding. This heating is to be done before welding is started to drive moisture from the region of the weld.

3.1.4 Welding shall not be done when the surfaces are wet or exposed to rain, mist, snow, sleet, frost, or excessive wind, or when welders, welding operators or tack welders are exposed to such inclement conditions.

3.1.5 The sizes and lengths of welds shall be those specified by the design requirements and detail drawings.

3.1.6 The locations of welds shall not be changed from those shown on the drawings.

3.1.7 The use of anti-spatter compound shall be prohibited.

3.2 Preparation of Base Material

3.2.1 Edge preparation can be accomplished by shearing, sawing, plasma arc cutting, chipping, planing, milling or routing. Grinding of aluminum, except as a final weld contouring and finishing operation, is not recommended.

3.2.1.1 When grinding is necessary, care shall be taken to select nonloading type abrasives specifically intended for use on aluminum, and the abrasives shall be maintained free of lubricants and other foreign material.

3.2.1.2 All exposed cut edges on alloy 7039 must be buttered if not part of a weld joint.

3.2.2 Surfaces and edges to be welded shall be smooth, uniform, and free from fins, tears, and cracks.

3.2.3 In plasma arc cutting, the arc shall be adjusted and manipulated so as to avoid cutting beyond (inside) the prescribed lines. The surface roughness of the cut surfaces shall be no greater than that defined by the American National Standards Institute (ANSI B46.1, *Surface Texture)* value of 1000 μin. for material up to 4 in. thick and 2000 μin for material 4 in. to 8 in. thick, except that members not subject to calculated stress at the ends may meet the surface roughness value of 2000 μin. Roughness exceeding the permissible amount and occasional notches or gouges more than 3/16 in. deep, on otherwise satisfactory surfaces shall be faired into the cut surface by machining or grinding to a slope not exceeding one in ten. In cut edges, occasional notches or gouges less than 7/16 in, deep in material up to 4 in. in thickness, or less than 5/8 in. deep in material more than 4 in. thick may, with the approval of the Material Review Board (MRB), be repaired by welding in accordance with approved repair procedures.

3.2.4 Visual Inspection and Repair of Cut Edges[1]

3.2.4.1 In the determination of limits of internal discontinuities revealed on sheared or cut edges and caused by tearing, inclusions, or delamination (seldom encountered in aluminum products), the amount of metal removed shall be

the minimum necessary to remove the discontinuity or to determine that the permissible limit of the discontinuity is not exceeded. The removal of metal for this purpose may be done from either the plate surface or a cut edge. Cut edges may exist at any angle with respect to the direction of rolling.

3.2.4.2 The limits of acceptability and the repair of edge discontinuities shall be in accordance with Table 3.1, in which the length of the discontinuity is the visible long dimension on the cut edge, and the depth is the distance that the discontinuity is determined to extend into the plate from the cut edge.

3.2.4.3 For discontinuities with both length and depth greater than 1 in., discovered by visual examination of the cut edge and determined to exceed 1 in. in depth for each discontinuity exhibited before welding or during examination of welded joints by radiographic or ultrasonic examination, the following procedures shall be followed:

(1) Where discontinuities, such as W, X, or Y in Figure 3.1, are discovered prior to completing the joint, the size and shape of the discontinuity shall be determined by ultrasonic inspection

(2) For acceptance, the area of the discontinuity (or the aggregate area of multiple discontinuities) shall not exceed 4% of the plate area (length x width) with the following exception: If the length of discontinuities on any transverse section, as measured perpendicular to the plate length, exceeds 20% of the plate width, the 4% allowance shall be reduced by the percentage amount of the length exceeding 20% of the plate width. (For example, if the length of a discontinuity is 30% of the plate width, the area of discontinuity cannot exceed 3.6% of the plate area.) The discontinuity on the cut edge of the plate shall be gouged out to a depth of 1 in. beyond its intersection with the surface by chipping or gouging, and blocked off by welding in layers.

(3) If a discontinuity, Z, not exceeding the allowable area in 3.2.4.3 (2) is discovered after the joint has been completed and is determined to be 1 in or more away from the weld, no repair of the discontinuity is required. If the discontinuity Z is less than 1 in. away from the weld, it shall be gouged out to a distance of 1 in from the fusion zone of the weld by chipping or gouging. The groove shall then be filled by welding. Repair by welding shall be subject to the same NDT requirement as other groove welds.

(4) If the area of the discontinuity W, X, Y, or Z exceeds the allowable limits in 3.2.4.3 (2), the plate or subcomponent shall be rejected and replaced, or repaired at the discretion

Table 3.1

Limit of Acceptability and Repair of Cut Edge Discontinuities in Plate (see 3.2.4.2)

Description of Discontinuity	Plate Repair Required
Any discontinuity 1 in. in length or less	None, need not be explored
Any discontinuity over 1 in. in length and 1/8 in. maximum depth	None, but the depth should be explored*
Any discontinuity over 1 in. in length with depth over 1/8 in. but not greater than ¼ in.	Remove, need not weld
Any discontinuity over 1 in. in length with depth over ¼ in. but not greater than 1 in.	Completely remove and weld. Aggregate length of welding shall not exceed 20% of the length of the plate edge being repaired.
Any discontinuity over 1 in. in length with depth greater than 1 in.	See 3.2.4.3

* A spot check of 10% of the discontinuities on the cut edge in question should be explored to determine depth. If the depth of any one of the discontinuities explored exceeds 1/8 in., then all of the discontinuities remaining on that edge shall be explored to determine depth. If none of the discontinuities explored in the 10% spot check have a depth exceeding 1/8 in., the remainder of the discontinuities on that edge need not be explored.

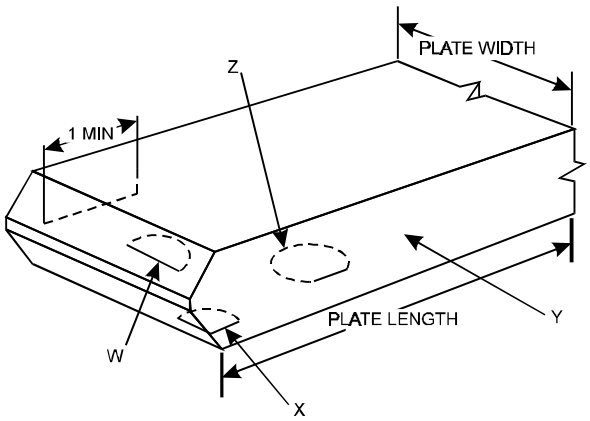

Figure 3.1 — Edge Discontinuities in Cut Plate (see 3.2.4.3)

of the Material Review Board (MRB). The aggregate length of weld repair shall not exceed 20% of the length of the plate edge, without the approval of the MRB.

(5) All repair welding shall be in accordance with a qualified procedure and the applicable subsections of this code, and performed by a qualified welder.

3.2.5 Reentrant corners, except for the corners of weld-access cope holes adjacent to a flange, shall have a fillet radius of no less than ½ in. except it shall be ¾ in. for major structural components. The fillet and its adjacent cuts shall meet without offset or cutting past the point of tangency.

3.2.6 Machining, sawing, gouging, or chipping may be used to back gouge, remove temporary welds, or remove unacceptable work or metal.

3.2.7 All surfaces to be welded shall be free from thick aluminum oxide, paint, grease, cutting fluids and moisture.

3.2.7.1 Oily material shall be degreased either chemically or with an approved solvent. Caution should be exercised in the use of flammable solvents. The health and safety concerns should be recognized (see ANSI/ASC Z49.1).

3.2.7.2 Thick aluminum oxide shall be removed with a stainless steel brush or other approved material, or by chemical methods.

3.2.8 Degreasing should be followed by scratch brushing of surfaces to be welded, with a hand or power-driven stainless steel brush to ensure thick aluminum oxide is removed. In multi-pass welds scratch brushing may be necessary between passes. The brushes should be kept exclusively for use with aluminum and be kept clean.

The interval between any scratch brushing of the joint and welding shall not exceed 24 hours. If contamination with dirt or moisture occurs after cleaning and prior to welding, the joint shall be recleaned.

3.3 Assembly

3.3.1 Abutting parts to be joined by groove welds shall be properly aligned. Where the parts are effectively restrained against bending due to an offset in alignment, an offset not exceeding 10% of the thickness of the thinner part, but in no case more than 3/16 in., may be allowed as a departure from the theoretical alignment. In correcting misalignment in such cases, the parts shall not be drawn in to a greater slope than ½ in. in 12 in. Measurement of offset shall be based on the midplanes of the parts, unless otherwise shown on the drawings.

3.3.2 Welding grooves which vary from those shown on the detail drawings and procedure specifications shall be referred to MRB.

3.3.3 Parts to be joined by partial joint penetration groove welds parallel to the length of the member, except for bearing joints, shall be brought into contact as closely as practicable. The root opening between parts shall not exceed .090 in. except in cases involving rolled or extruded shapes, or plates 3 in. or more in thickness. When after straightening, the root opening cannot be closed sufficiently to meet this tolerance, a maximum root opening of 5/16 in. is acceptable, provided a sealing weld or suitable backing material is used to prevent melt-through.[2] The maximum root opening for slip fit joints, reference Figure 3.2, with integral backing shall be 5/16 in. for extruded shapes or plates or as otherwise specified in the appropriate weld procedure.

3.3.4 Parts to be joined by fillet welds shall be brought into contact as closely as practicable. The separation between parts shall not exceed .090 in.

3.3.5 The work shall be positioned for flat-position welding whenever practicable.

3.3.6 The separation between faying surfaces of lap joints and of butt joints landing on a

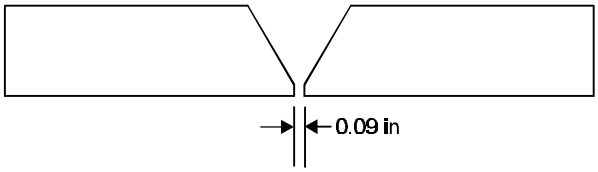

(A) ROOT OPENING ON FIXED JOINTS

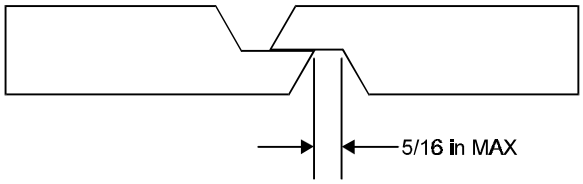

(B) ROOT OPENING ON SLIP-FIT JOINTS

Figure 3.2 — Maximum Allowable Root Opening (see 3.3.3)

backing shall not exceed .090 in. The use of filler plates is prohibited except as specified on the drawings.

3.3.7 Members to be welded shall be brought into correct alignment and held in position by fixtures and strongbacks, bolts, clamps, wedges, guy lines, struts, other suitable devices, or by tack welds until the welding has been completed. The use of fixtures is recommended when practicable. The fixtures shall have sufficient stiffness and strength to counteract the forces resulting from the temperature changes in the weldment. Similarly, tack welds shall have sufficient effective throat or weld size and length to develop the necessary strength.

3.3.7.1 Tack welds shall be made in accordance with a qualified welding procedure, by a qualified tack welder, and subject to the same quality requirements as the final welds. Tack welds which are to be incorporated into the final weld shall be made with filler metal of the same composition and shall be cleaned thoroughly before incorporation. Tack welds not incorporated into final welds may be removed by grinding, chipping, machining or plasma gouging unless they have been installed for the purpose of support and do not interfere with fit, function or inspection.

3.3.7.2 Temporary welds shall be made by a qualified welding procedure, by a qualified welder, and be subject to the same quality requirements as the final weld. Strongbacks, clips, hangers and other temporary parts that have been welded in place to facilitate assembly shall be removed and the welds made flush with the metal surface. Surface defects that extend below the plane of the metal surface shall be repaired in accordance with an approved repair procedure.

3.4 Control of Distortion and Shrinkage

3.4.1 In assembling and joining parts of a structure or of built-up members, and in welding reinforcing parts to members, the procedure and sequence shall be such as will minimize distortion and shrinkage.

3.4.2 Insofar as practicable, all welds shall be deposited in a sequence that will balance the applied heat of welding while the welding progresses.

3.4.3 A welding sequence and distortion-control program shall be prepared and/or approved by Weld Engineering and made available to Production before the start of welding on a member in which shrinkage or distortion is likely to affect the adequacy of the member or structure.

3.4.4 Weld components may be preloaded prior to welding to reduce or eliminate weld distortion.

3.4.5 Joints expected to have significant shrinkage should usually be welded before joints expected to have lesser shrinkage

3.4.6 In making welds under conditions of severe external shrinkage restraint, the welding shall be completed or completed to a point that will ensure freedom from cracking, before the joint is allowed to cool.

3.5 Weld Profiles

3.5.1 The faces of fillet welds may be slightly convex, flat, or slightly concave as shown in Figures 3.3(A) and 3.3(B), with none of the unacceptable profiles shown in Figure 3.3(C). Except at outside corner joints, the convexity, C, of a weld or individual surface bead shall not exceed 0.07 times the actual face width of the weld or individual bead, respectively, plus 0.06 in.

3.5.2 Groove welds shall be made with slight or minimum reinforcement unless otherwise specified. In the case of butt and corner joints, the weld reinforcement and melt-through height shall not exceed the values listed in Figures

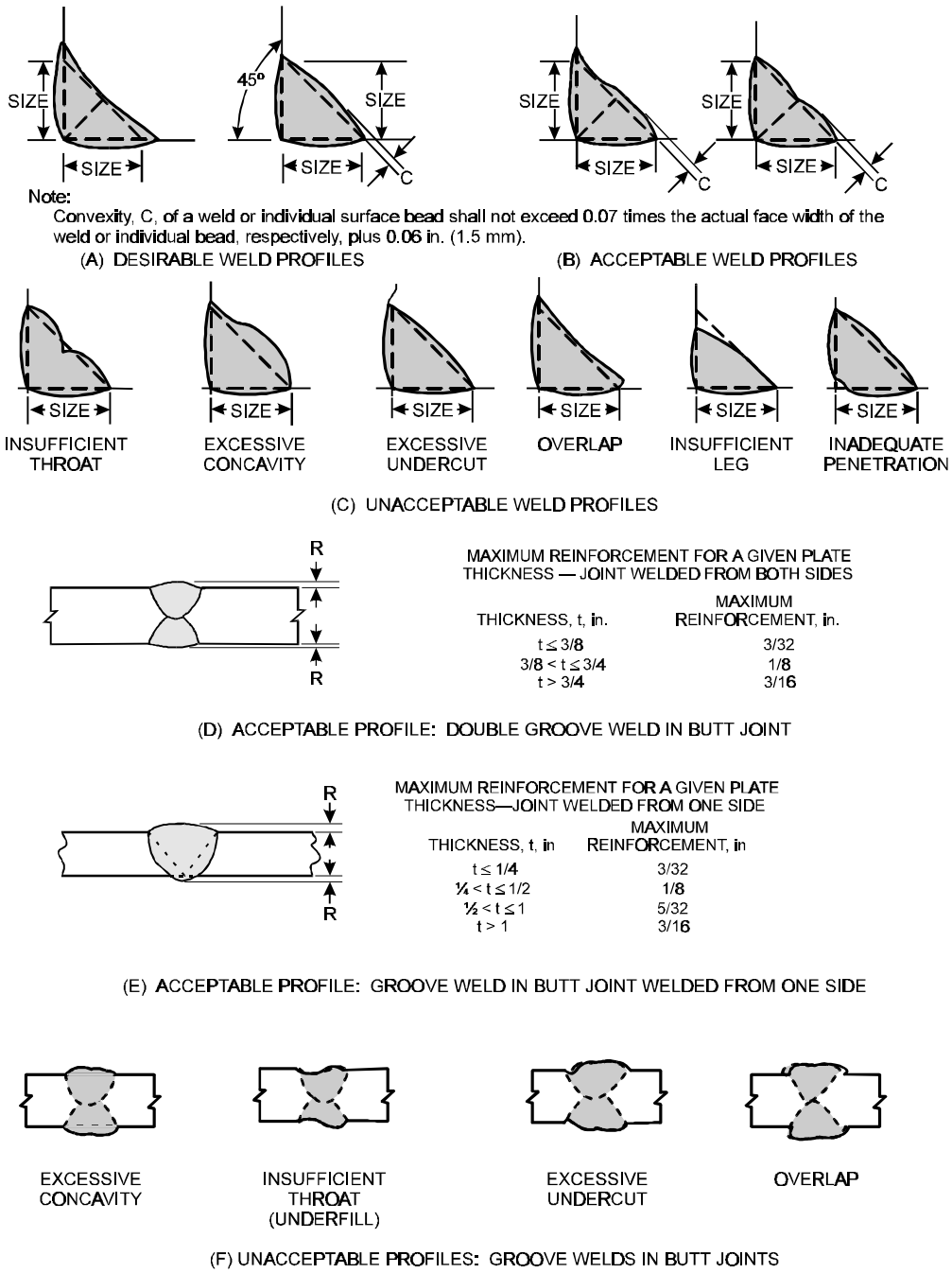

Figure 3.3 — Acceptable and Unacceptable Weld Profiles (see 3.5)

3.3(D) and 3.3(E) and shall have a gradual transition to the plane of the base metal surface. The weld shall be free of discontinuities of the types shown for butt joints in Figure 3.3(F).

3.5.3 Surfaces of butt joints required to be flush shall be finished so as not to reduce the thickness of either of the base metals or weld metal by more than 1/32 in. or 5% of the thickness, whichever is smaller, or leave reinforcement that exceeds 1/32 in.

3.6 Rework/Repairs

This section is provided for guidance in the case that rework/repairs are required. Repairs shall be performed in accordance with approved standard repair procedures, which shall take precedence over this section.

Definitions for rework and repair are as follows:

Rework – The removal and replacing of an existing weld, addition or deletion of weld metal to bring a weld to drawing requirement, or the removal and replacement of a mislocated component.

Repair – Through the welding process, the restoration of base metal to the correct configuration. This includes mislocated holes, slots, undersize and oversize conditions.

3.6.1 The removal of weld metal or portions of the base metal may be done in accordance with section 3.2.6. The removal shall be done so that the remaining weld metal and base metal are not nicked or undercut. Unacceptable portions of the weld shall be removed without substantial removal of base metal. Metal added to compensate for any deficiency in the size of the weld shall be deposited by a qualified welder with filler of the same composition in accordance with an approved welding procedure The surfaces shall be cleaned thoroughly before welding.

3.6.2 The contractor has the option of either reworking an unacceptable weld, or removing and replacing the entire weld, except as required by section 3.6.3. If the contractor elects to rework the weld, it shall be corrected as follows:

3.6.2.1 **Overlap or Excessive Convexity.** Excess weld metal shall be removed by machining, chipping, or grinding.

3.6.2.2 **Excessive Concavity of Weld or Crater, Under-size Welds, Undercutting.** Surfaces shall be prepared and additional weld metal deposited in accordance with the specified welding procedure.

3.6.2.3 **Excessive Weld Porosity or Incomplete Fusion.** Unacceptable portions shall be removed and the area rewelded in accordance with the specified welding procedure.

3.6.2.4 **Cracks in Weld or Base Metal.** The extent of the crack shall be ascertained by use of visual, or by dye penetrant, X-ray examination, or other NDT means. The crack shall be removed and the area rewelded in accordance with the specified welding procedure, as required in sections 8, 9, or 10. If dye penetrant is used, all traces of penetrant and developer shall be removed before rewelding is begun.

3.6.3 If the contractor elects to remove and replace the entire weld, the procedure approved for use on the original weld shall be used and such replacement welds shall be recorded.

3.6.4 The reworked or replaced weld shall be tested or examined by the method originally used and the same technique and quality acceptance criteria shall be applied.

3.6.5 Members distorted by welding shall be straightened at ambient temperature by mechanical means. If localized heating is to be applied in any straightening operation, the complete procedure shall be approved by the Government.

3.6.6 Approval of the Weld or Quality Engineer or of Production supervision shall be obtained for such corrections as weld repairs to mill defects in the base metal and repair of cracks in accordance with approved repair procedures.

3.6.7 Production Supervision shall be notified before improperly fitted and tacked members are cut apart.

3.6.8 If, after an unacceptable weld has been made, work is performed which has rendered that weld inaccessible or has created new conditions which make correction of the unacceptable weld dangerous or ineffective, then the original conditions shall be restored by removing the added welds or members, or both, before the corrections are made. If this is not done, the weld must be submitted to MRB for disposition.

3.7 Cleaning Of Completed Welds

3.7.1 Welded joints shall not be painted or otherwise covered before the welding is examined and approved.

3.7.2 Weld spatter shall be removed only when its presence affects subsequent component fit, or where on the finished product it results in a potential personnel safety hazard.

Footnotes:

1 The requirements of 3.2.4 are not applicable to cases in which the stress is applied normal to the plate surface.

2 Backing to prevent melt-through may be of ceramic glass tape, austenitic stainless steel or an alloy with the M-number classification of the base metal. The backing shall be in intimate contact with the root side of the components being welded. If aluminum alloy backing is to be left permanently in place, it may be attached by continuous fillet welds.

4. Technique

Part A

General Requirements for Gas Metal Arc, Gas Tungsten Arc and Plasma Arc (Variable Polarity) Welding

4.1 Material Requirements

4.1.1 The Filler metal shall comply with all the requirements set forth in the latest edition of ANSI/AWS A5.10, *Specification for Bare Aluminum and Aluminum Alloy Welding Electrodes and Rods*. (Note: When required, the filler metal must have the capability of meeting radiographic soundness requirements.)

4.1.2 Filler metal alloys to be used with specific base metals and combinations of, base metals shall be as shown in Table 1.2.

4.1.3 The filler metals used shall conform to ANSI/AWS A5.10. The contractor or manufacturer shall have a method of verification (purchase orders, packing slips, etc.) that provides evidence the filler metals conforms to ANSI/AWS A5.10.

4.2 Welding Processes

The welding process shall be either gas metal arc (GMAW), pulsed gas metal arc (GMAW-P), gas tungsten arc (GTAW), plasma arc with variable polarity (PAW-VP), automatic gas metal arc (GMAW-AU), mechanized gas metal arc (GMAW-ME), or robotic gas metal arc (GMAW-RO).

4.3 Shielding Gases

4.3.1 Argon, helium, or mixtures of argon and helium used for shielding shall be a welding grade having a dew point of -63° F or lower.

4.3.2 The contractor or manufacturer shall maintain records of the gas manufacturer's certification that the gas or gas mixture is suitable for the intended application and conforms to the dew point required in 4.3.1.

4.4 Preheat Requirements

Preheating is sometimes used for welding thick aluminum sections to avoid cold-start defects, to achieve heat balance with dissimilar thicknesses, or to remove moisture. Special care shall be taken to ensure close temperature control, particularly when fabricating the heat treatable aluminum alloys and the 5000 series aluminum alloys containing more than 3% magnesium. Preheating temperatures for these types of alloys shall not exceed 250° F. Holding times at this temperature shall not exceed 15 minutes.

4.5 Interpass Temperature Requirements

When fabricating the heat treatable aluminum alloys and the 5000 series alloys containing more than 3% magnesium, interpass temperatures shall not exceed 275° F to provide optimum weld properties and to decrease the possibility of sensitization to exfoliation and stress corrosion cracking.

4.6 Arc Strikes

Arc strikes outside the area of permanent welds should be avoided on any base metal. Blemishes caused by arc strikes shall be finished to a smooth contour when their presence affects form, fit, or function, and checked to ensure no loss of soundness of the base metal. Cracks caused by arc strikes shall be removed. The cracks shall be repair-welded and the weld finished flush with the metal surface.

4.7 Cleaning Prior to Welding

All joint faces and the surfaces adjacent to the area to be welded shall be prepared in accordance with 3.2.8.

4.8 Weld Termination

4.8.1 Welds shall be started and stopped in a manner that ensures sound welds. Whenever possible and appropriate, the starting and stopping shall be done by the use of extension bars or run-on and run-off plates.

4.8.2 Extension bars or run-on and run-off plates shall be removed (preferably by mechanical cutting) upon completion and cooling of the weld. The ends of the weld shall be made smooth and fit flush with the edges of the adjacent parts.

4.8.3 When it is impossible to terminate a weld on an extension bar or run-on or run-off plate, prior consideration to weld termination should be given so as to terminate the weld in a low stress area.

4.8.4 The techniques for terminating a fillet weld or a cover pass bead within a joint should consist of the following, or any combination of the following:

(1) Reversing the direction of travel for a minimum distance of 2 in.

(2) Increasing travel speed to reduce crater size.

(3) Providing suitable weld build-up with the weld surface.

(4) Tail-in and tail-out.

4.8.5 Crater cracks existing in tack welds that will be incorporated into final welds, extension of fillet welds, and within intermediate or root passes of root welds, shall be removed by mechanical means prior to additional welding.

4.9 Backing to Prevent Melting Through

4.9.1 Permanent backing for groove welds shall be of aluminum of the same M-Number as the base metal. Permanent backing shall not be used when the root opening exceeds 3/8 in.

4.9.2 Backing shall be made continuous for the full length of the weld. All welds in the backing shall be complete joint penetration groove welds with the reinforcement ground smooth. These welds shall meet the workmanship requirements of section 3 of this Code.

4.9.3 Permanent backing in all weld repairs need not be removed unless specified on the drawing or required by MRB disposition.

4.9.4 Temporary backing for groove welds may be of austenitic stainless steel, glass tape, ceramic, or aluminum (3XXX, 5XXX, 6XXX). Copper shall not be used as a temporary backing because of the dangers of weld contamination and corrosion problems.

4.10 Peening

Weld peening may be used only when permitted on the drawing.

4.11 Thermal Stress-Relief Treatment

4.11.1 Where required by contract documents, welded assemblies shall be stress relieved by thermal treatment. Specific thermal practices should be determined for each alloy and temper considered for stress relief. Finish machining shall preferably be done after stress relief.

4.11.2 The stress relief treatment procedure shall be as stipulated on the drawing and shall conform to the following requirements:

(1) The temperature of the furnace shall not exceed 200° F at the time the welded assembly is placed in it.

(2) The maximum temperature developed in any part of the assembly and the exposure time shall not exceed the drawing requirements.

(3) During the heating period, the variation in temperature throughout the weldment shall be no greater than 100° F within any 15 ft interval of length.

Part B

Gas Metal Arc Welding

4.12 General

This part covers specific requirements for gas metal arc welding in the solid state and pulsed modes, in addition to requirements of Part A of this section.

4.13 Restrictions on Gas Metal Arc Welding with Single Electrode

4.13.1 The following are restrictions on the welding procedures:

4.13.1.1 Except for mechanized high current density or automated welding, the maximum size of a stringer bead fillet weld made in one pass shall be 3/8 in. for all welding positions.

For heat treatable aluminum alloys that are to be postweld precipitation-age-hardened only, the maximum size of stringer bead fillet welds made in one pass shall be 5/16 in. for all welding positions.

4.13.1.2 Except for mechanized high current density or automated welding, the thickness of weld layers, except root and surface layers, shall not exceed 3/8 in. When the root opening of a groove weld exceeds 3/8 in., a multiple pass split-layer technique shall be used. The split-layer technique shall also be used in making all multiple pass welds when the width of the layer exceeds 1¼ in.

4.13.1.3 The welding current, voltage, gas flow, filler metal diameter and travel speed shall be in compliance with qualified PQRs/WPSs and

the requirements of section 8, 9, or 10, as applicable.

4.13.1.4 The progression of all passes of vertical position welding shall be upwards.

4,13.1.5 Welding shall employ only the forehand technique

4.13.2 Except as noted in section 10, complete joint penetration groove welds made without the use of backing shall have the root of the initial pass backgouged, chipped, or otherwise removed to sound metal and all trace of root discontinuity shall be eliminated before welding is started on the second side.

4.13.3 Gas metal arc welding shall not be done in a draft or wind. Where drafty conditions exist, a windbreak or shelter shall be employed.

4.13.4 Copper inclusions deposited during meltback time (burnback) shall be gouged, chipped, or otherwise removed to sound metal.

Part C

Gas Tungsten Arc Welding

4.14 General

This part covers specific requirements for gas tungsten arc welding in addition to the requirements of Part A of this section.

4.15 Tungsten Electrodes

For gas tungsten arc welding, the levels of welding current shall be compatible with the diameter of the electrode. Table 4.1 shows the operating current ranges for tungsten electrodes of various diameters and types, and Table 4.2 shows the chemical composition of the AWS classifications.

Thoriated tungsten electrodes of any classification (EWTh-1, -2, or -3) may not be used at any UDLP site.

Table 4.1

Typical Current Ranges for Tungsten Electrodes[a] (see 4.15)

	Direct Current, A		Alternating Current, A					
	Straight Polarity	Reverse Polarity	Unbalanced Wave			Balanced Wave		
Electrode Diam. in	EWP EWTh-l EWTh-2 EWTh-3	EWP EWTh-l EWTh-2 EWTh-3	EWP	EWTh-l EWTh-2 EWZr	EWTh-3	EWP	EWTh-1 EWTh-2 EWZr	EWTh-3
0.010	up to 15	b	up to 15	up to 15	b	up to 15	up to 15	b
0.020	5-20	b	5-15	5-20	b	10-20	5-20	10-20
0.040	15-80	b	10-60	15-80	10-80	20-30	20-60	20-60
1/16	70-150	10-20	50-100	70-150	50-150	30-80	60-120	30-120
3/32	150-250	15-30	100-160	140-235	100-235	60-130	100-180	60-180
1/8	250-400	25-40	150-210	225-325	150-325	100-180	160-250	100-250
5/32	400-500	40-55	200-275	300-400	200-400	160-240	200-320	160-320
3/16	500-750	55-80	250-350	400-500	250-500	190-300	290-390	190-390
1/4	750-1000	80-125	325-450	500-630	325-630	250-400	340-525	250-525

Notes:

a. All values are based on the use of argon as the shielding gas. Other current values may be employed depending on the shielding gas, type of equipment, and application.

b. These combinations are not commonly used

Table 4.2

Typical Chemical Composition of Tungsten Electrodes[a] (see 4.15)

AWS Classification	Tungsten, Min. Percent	Thoria, Percent	Zirconia, Percent	Total Other Elements, Max. Percent
EWP	99.5	—		0.5
EWTh-1	98.5	0.8 to 1.2	—	0.5
EWTh-2	97.5	1.7 to 2.2		0.5
EWTh-3[b]	98.95	0.35 to 0.55	—	0.5
EWZr	99.2	—	0.15 to 0.40	0.5

Notes:

a. For additional information, see Volume 2 of the Seventh Edition of the Welding Handbook, pages 85 87, and page 90.

b. A tungsten electrode with an integral lateral segment throughout its length which contains 1.0 to 2.0% thoria. The average thoria content of the electrode shall be as specified in this table.

4.16 Restrictions on Gas Tungsten Arc Welding

The following are restrictions on the welding procedures:

4.6.1.1 The maximum size of a fillet weld made in one pass shall be ¼ in. for all positions.

4.16.1.2 The thickness of weld layers shall not exceed ¼ in. When the root opening of a groove weld exceeds 3/16 in., a multiple pass, split-layer technique shall be used. The split layer technique shall be used also in making all multiple pass welds when the width of the layer exceeds 3/8 in.4.16.1.3 The welding current, voltage, gas flow, filler metal diameter and travel speed shall be in compliance with qualified PQRs/WPSs and the requirements of section 8, 9, or 10, as applicable.

4.16.1.4 The welder shall employ the forehand technique.

4.16.2 Except as provided in section 10, complete joint penetration groove welds made without the use of backing shall have the root of the initial pass backgouged, chipped, or otherwise removed to sound metal, and all trace of root discontinuity shall be eliminated before welding is started from the second side.

4.16.3 Gas tungsten arc welding shall not be done in a draft or wind. When drafty conditions exist. a windbreak or shelter shall be employed.

Part D

Plasma Arc Welding

4.17 General

This part covers the specific requirements for variable polarity plasma arc welding in addition to, or which supersede the requirements of Part A of this section.[1]

4.18 Tungsten Electrodes

For variable polarity plasma arc welding, the levels of welding currents shall be compatible with the range listed in Table 4.1 for electrodes operating with an unbalanced wave alternating current.

Thoriated tungsten electrodes of any classification (EWTh-1, -2, or -3) may not be used at any UDLP site.

4.19 Restrictions on Variable Polarity Plasma Arc Welding

4.19.1 Complete joint penetration groove welds need not be backgouged if the penetration bead is smooth and property fused.

4.19.2 Variable polarity plasma arc welding shall not be done in a draft or wind. When conditions exist, a wind break or shelter shall be used.

Footnotes:

1 Variable polarity plasma arc welding: plasma arc welding employing a power supply providing cyclic reversal of polarity with separate control of current, amplitude and duration for each polarity.

5. Qualification of Procedures and Personnel

Part A

General Requirements

5.1 General

The qualification requirements of this code are to assure that the procedures actually used in production meet a recognized standard.[1] To accomplish this objective, each contractor or manufacturer shall do the following:

(1) Prepare a written Welding Procedure Specification In accordance with 5.13.2 for each condition. See the Appendix.

(2) Qualify the procedure described by the Welding Procedure Specification in accordance with Part C of this section using materials, equipment, cleaning and preparation methods, welding condition, etc. that are specified in the Welding Procedure Specification.

(3) Qualify the welders, welding operators, and tack welders in accordance with Part D of this section before doing any production work.

(4) Maintain records of each of the above items on forms such as or similar to those shown in the Appendix.

(5) Impart knowledge of the procedures to be used to the welders, welding operators, and tack welders

5.2 Qualification of Welding Procedures

5.2.1 Only procedures qualified in accordance with Part C of this section shall be recognized as approved procedures.

5.2.2 There are no welding procedures designated as prequalified. Previously qualified procedures shall be documented by sufficient test data to satisfy the requirements of Part C of this section and be approved by the Government.

5.2.3 The Government should accept properly documented evidence of previous qualification of the joint welding procedures to be employed, unless a new procedure qualification is required by the contract documents. The modified WPS and PQR forms shall be used when the previously qualified procedures do not meet all of the requirements of section 5, Part C.

5.2.4 The essential variables of a welding procedure may be changed within the limitations of 5.16 without requalification. Changes outside these limits require qualification of the altered welding procedure.

5.2.5 Variables not listed in 5.16 are designated as non-essentials. They may be changed without qualification of the altered welding procedure.

5.3 Qualification of Welders, Welding Operators, and Tack Welders

5.3.1 Welders, welding operators, and tack welders to be employed on work under this Code shall have been qualified in accordance with the provisions of Part D of this section.

5.3.2 Properly documented evidence of previous qualification performed in accordance with part D of this section, or equivalent should be considered.

5.4 Qualification Responsibility

Except as permitted in 5.2 and 5.3, each contractor or manufacturer shall conduct the tests required by this Code to qualify the welding procedures and the welders, welding operators, and tack welders who will apply these procedures. A weld procedure qualified for any contract at any United Defense site shall be considered as being qualified for all United Defense sites and for all United Defense contractors who meet the requirements of this Code. A welder qualified at any United Defense site shall be considered as being qualified for the same process and position at any other United Defense site.

5.5 Records

Each contractor or manufacturer shall maintain a record of all welding procedure and performance qualifications of welders, welding operators, or tack welders. These records shall be maintained by the contractor or manufacturer and shall be made available to those authorized to examine them.

5.6 Position of Test Welds

5.6.1 Each welding procedure shall be qualified by positioning and welding the test assembly in

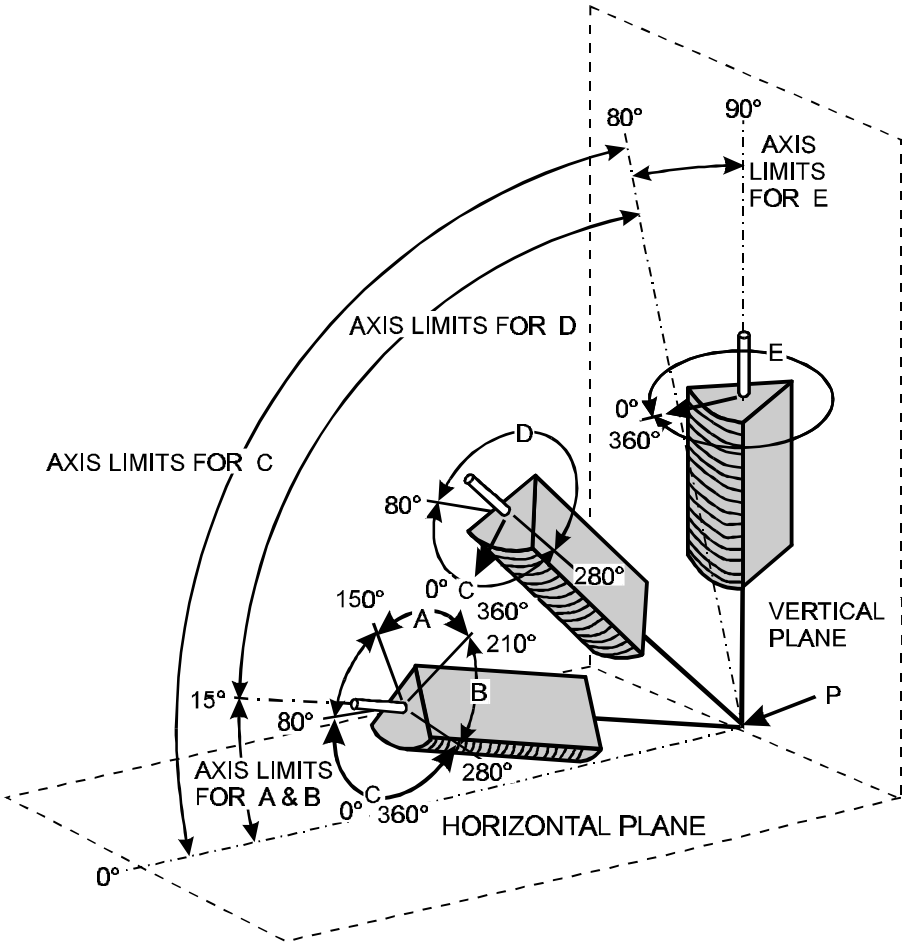

Tabulations of positions of groove welds

Position	Diagram Reference	Inclination of Axis	Rotation of Face
Flat	A	0°	150° to 210°
Horizontal	B	0° to 15°	80° to 150° 210° to 280°
Overhead	C	0° to 80°	0° to 80° 280° to 360°
Vertical	D E	15° to 80° 80° to 90°	80° to 280° 0° to 360°

Notes:

1. The horizontal reference plane is always taken to lie below the weld under consideration.
2. The inclination of axis is measured from the horizontal reference plane toward the vertical reference plane.
3. The angle of rotation of the face is determined by a line perpendicular to the theoretical face of the weld which passes through the axis of the weld. The reference position (0°) of rotation of the face invariably points in the direction opposite to that in which the axis angle increases. When looking at point P, the angle of rotation of the face of the weld is measured in a clockwise direction from the reference position (0°).

Figure 5.1 — Positions of Groove Welds (see 5.6.1)

the manner stated below for the position for which it is to be qualified. These positions are classified as: (1) flat, (2) horizontal, (3) vertical, or (4) overhead in accordance with Figures 5.1 and 5.2.

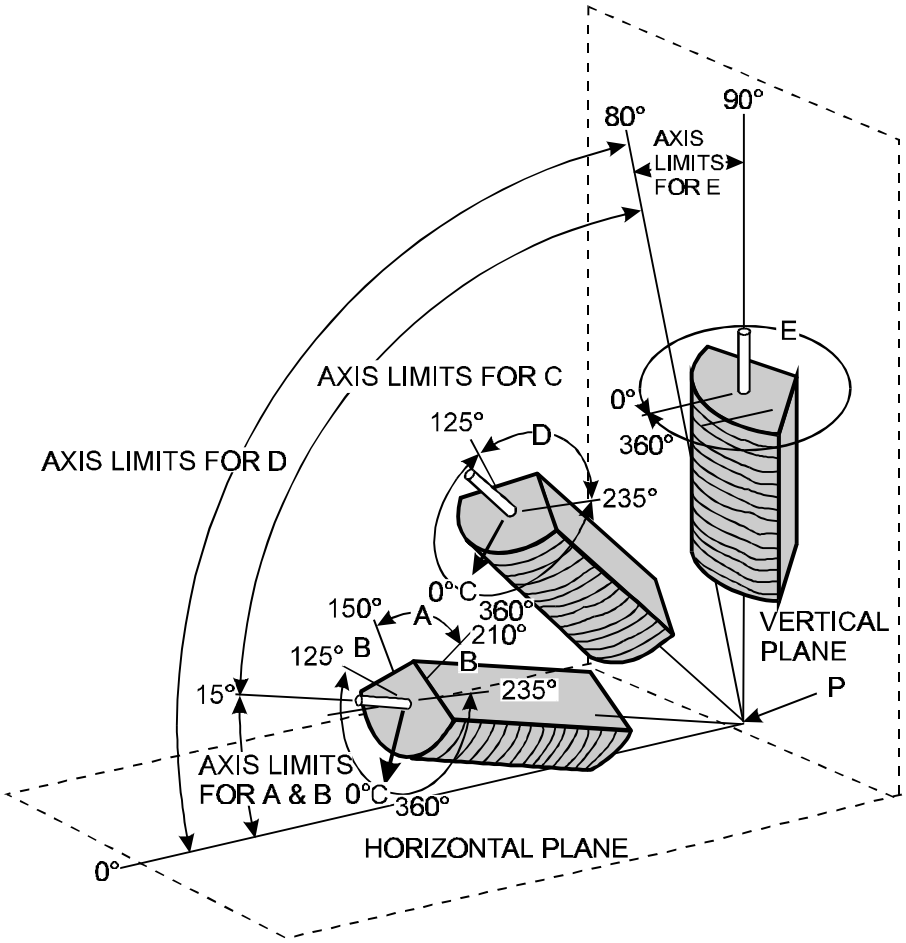

Tabulations of positions of fillet welds

Position	Diagram Reference	Inclination of Axis	Rotation of Face
Flat	A	0° to 15°	150° to 210°
Horizontal	B	0° to 15°	125° to 150° 210° to 235°
Overhead	C	0° to 80°	0° to 125° 235° to 360°
Vertical	D E	15° to 80° 80° to 90°	125° to 235° 0° to 360°

Notes:

1. The horizontal reference plane is always taken to lie below the weld under consideration.
2. The inclination of axis is measured from the horizontal reference plane toward the vertical.
3. The angle of rotation of the face is measured from a line perpendicular to the axis of the weld and lying in a vertical plane containing the axis. The reference position (0°) of rotation of the face invariably points in the direction opposite to that in which the axis angle increases. The angle of rotation of the face weld is measured in a clockwise direction from this reference position (0°) when looking at point P.

Figure 5.2 — Positions of Fillet Welds (see 5.6.1)

5.6.1.1 **Groove Welds — Plate** (Illustrated in Figure 5.3). In making the tests to qualify groove welds, test plates shall be welded in the following positions:

(1) Position 1G (Flat) — The test plates shall be placed in an approximately horizontal plane and the weld metal deposited from the upper side. See Figure 5.3(A).

(2) Position 2G (Horizontal) — The test plates shall be placed in an approximately vertical plane with the groove approximately horizontal. See Figure 5.3(B).

(3) Position 3G (Vertical) — The test plates shall be placed in an approximately vertical plane with the groove approximately vertical. See Figure 5.3(C).

(4) Position 4G (Overhead) — The test plates shall be placed in an approximately horizontal plane and the weld metal deposited from the under side. See Figure 5.3(D)

5.6.1.2 **Groove Welds — Pipe** (Illustrated in Figure 5.4). In making the tests to qualify groove welds, the test pipe[2] shall be welded in the following positions:

(1) Position 1G (Pipe Horizontal-Rotated) — The test pipe shall be placed with its axis approximately horizontal and the groove approximately vertical. The pipe shall be rotated during welding so the weld metal is deposited from the upper surface. See Figure 5.4(A).

(2) Position 2G (Pipe Vertical-Fixed) — The test pipe shall be placed with its axis approximately vertical and the welding groove approximately horizontal. The pipe shall not be rotated during welding. See Figure 5.4(B.

(3) Position 5G (Pipe Horizontal-Fixed) — The test pipe shall be placed with its axis approximately horizontal and the groove approximately vertical. The pipes shall not be rotated during welding. See Figure 5.4(C).

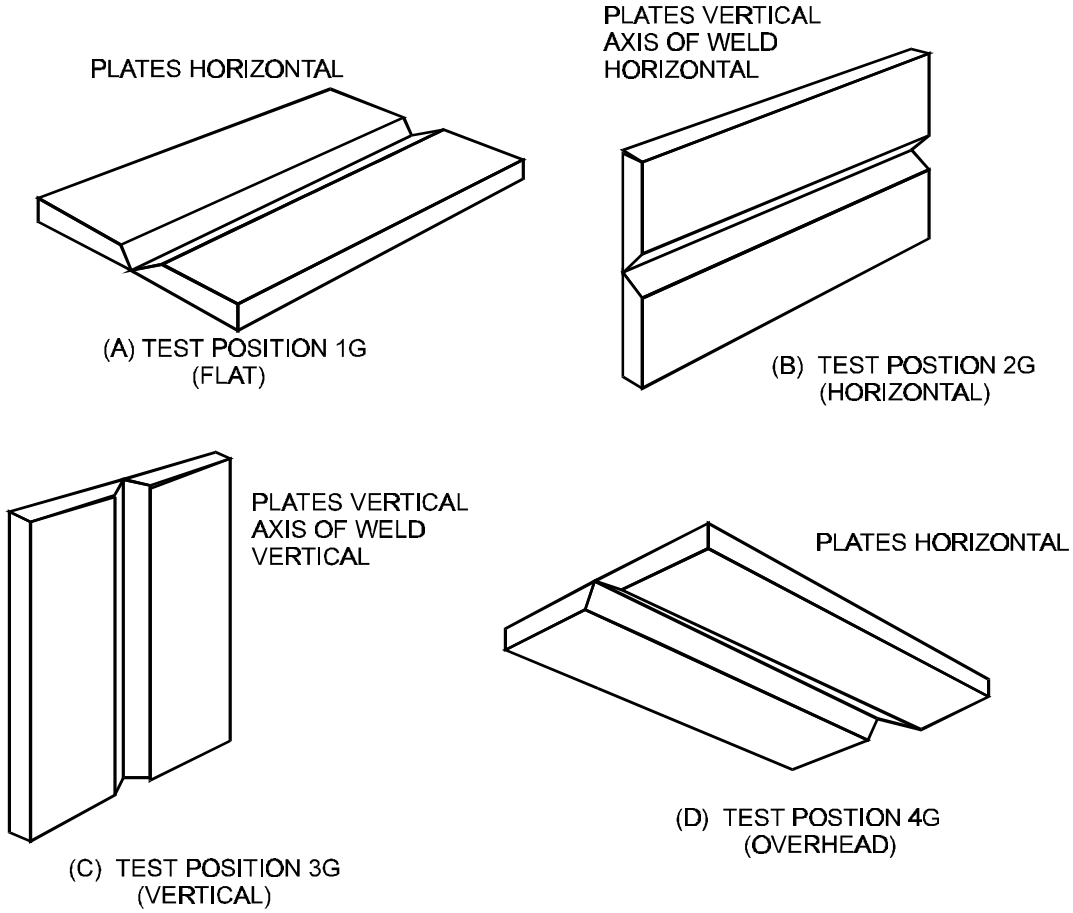

Figure 5.3 — Position of Test Plates for Groove Welds (see 5.6.1.1)

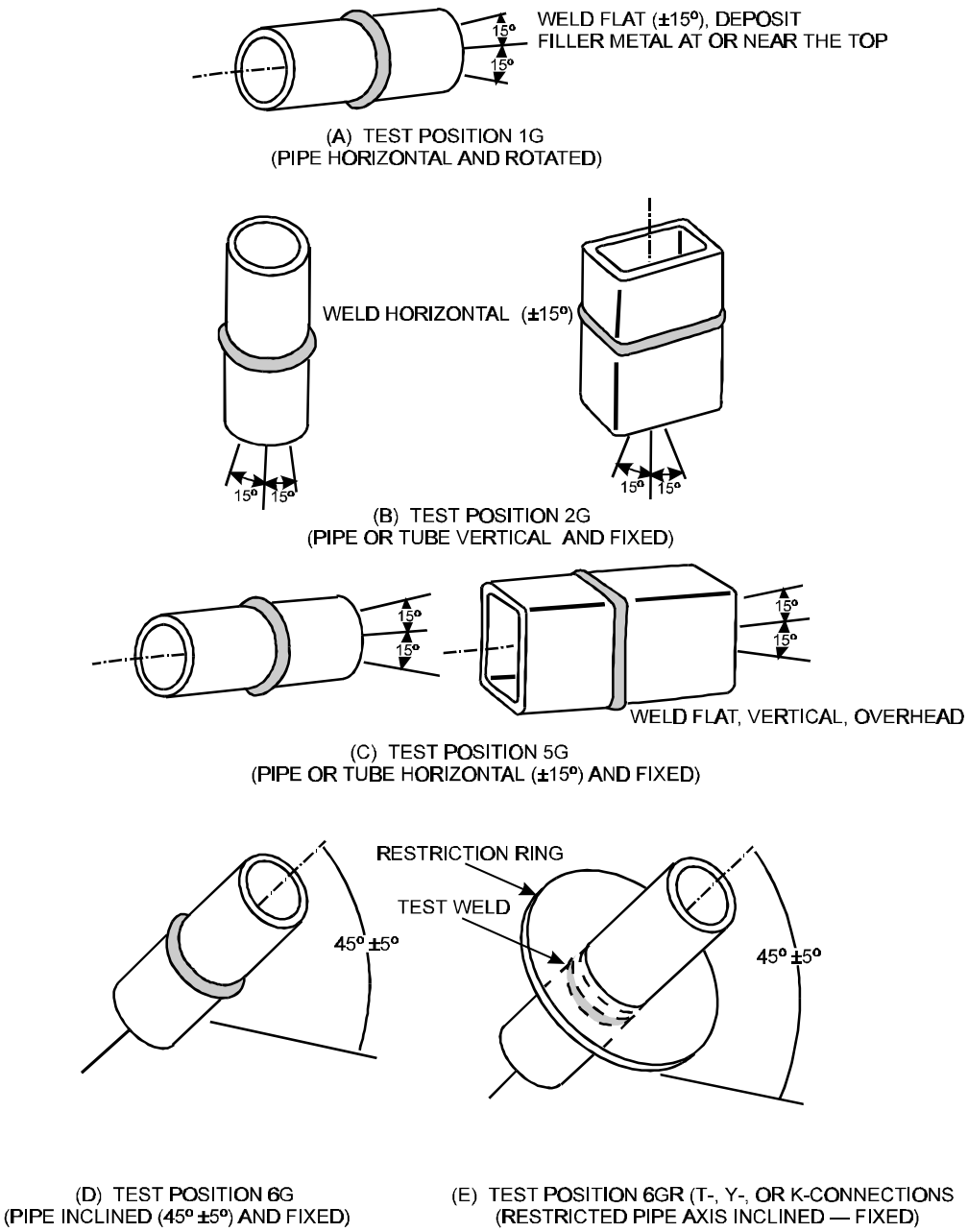

Figure 5.4 — Position of Test Plate for Groove Welds (see 5.6.1.2)

(4) Position 6G (Pipe Inclined-Fixed) — The test pipe shall be inclined at approximately 45° with the horizontal. The pipe shall not be rotated during welding. See Figure 5.4(D).

(5) Position 6GR (Restricted, Pipe Inclined-Fixed.) — Test for complete joint penetration groove welds of tubular T-, Y- and K-connections. The test pipe shall be provided with a restriction ring and be inclined at approximately 45° with the horizontal. The pipe shall not be rotated during welding. See Figure 5.4(E).

5.6.1.3 **Fillet Welds — Plate** (Illustrated in Figure 5.5). In making the tests to qualify welds on plate, test plates shall be welded in the positions outlined below:

(1) Position 1F (Flat) — The test plates shall be so placed that each fillet weld is deposited with its axis approximately horizontal and its throat approximately vertical. See Figure 5.5(A)

(2) Position 2F (Horizontal) — The test plates shall be so placed that each fillet weld is deposited on the upper side of a horizontal surface and against a vertical surface. See Figure 5.5(B).

(3) Position 3F (Vertical) — The test plates shall be placed in approximately vertical planes and each fillet weld deposited on vertical surfaces. See Figure 5.5(C).

(4) Position 4F(Overhead) — The test plates shall be so placed that each fillet weld is deposited on the under side of a horizontal surface and against a vertical surface. See Figure 5.5(D).

5.6.1.4 **Fillet Welds — Pipes** (Illustrated in Figure 5.6). In making the tests to qualify fillet welds on pipe the test pipe shall be welded in the positions outlined below:

(1) Position 1F (Pipe Inclined Rotated) — The test pipe shall be placed with its axis at approximately 45° and rotated during welding so that the filler metal is deposited in the flat position. See Figure 5.6(A).

(2) Position 2F (Pipe Vertical-Fixed) — The test pipe shall be placed with its axis approximately vertical. The filler metal shall be placed on the outer surface of the pipe at its juncture with the abutting plate or pipe. The assembly shall not be rotated during welding. See Figure 5.6(B).

(3) Position 2FR (Pipe Horizontal-Rotated) — The test pipe shall be placed with its axis approximately horizontal and rotated during welding so that filler metal is deposited in the horizontal position. See Figure 5.6(C).

(4) Position 4F (Overhead-Fixed) — The test pipe shall be placed with its axis approximately vertical. The filler metal shall be placed against the outer surface of the pipe at its juncture with the abutting plate or pipe. The assembly shall not be

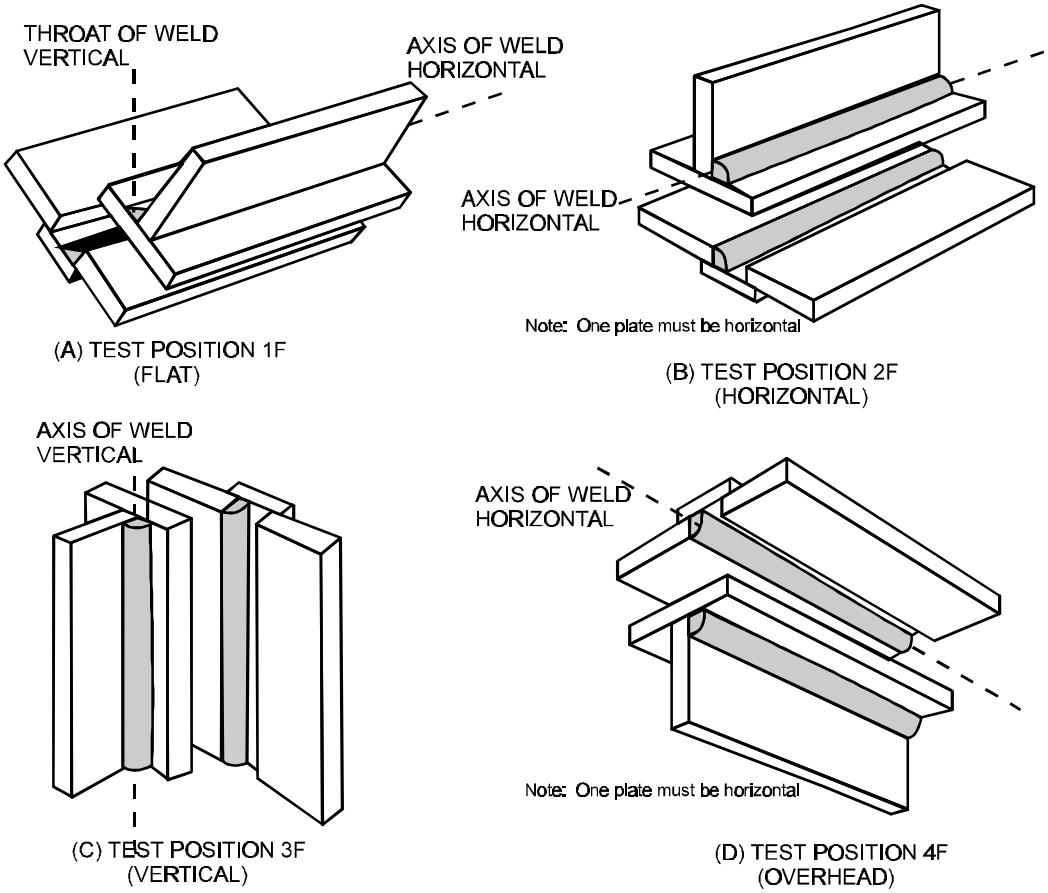

Figure 5.5 — Position of Test Plates for Fillet Welds (see 5.6.1.3)

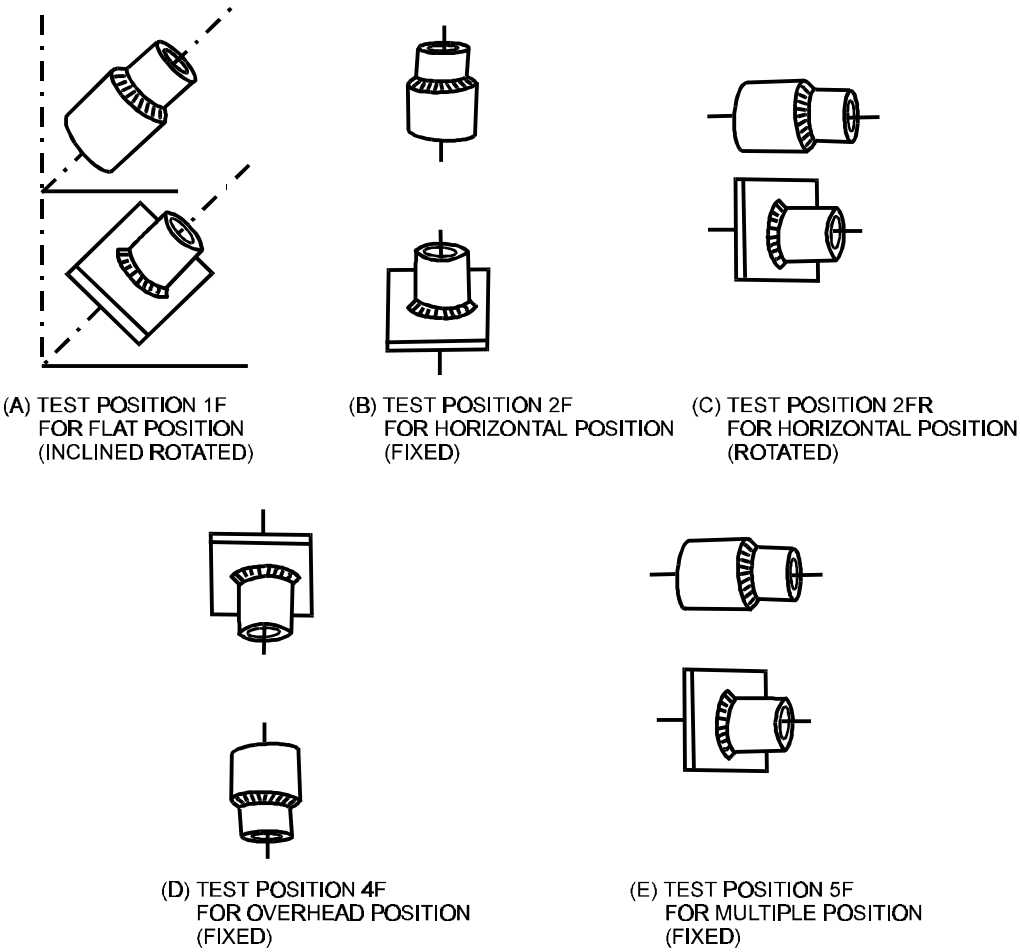

Figure 5.6 — Position for Test Pipes for Fillet Welds (see 5.6.1.4)

rotated during welding. See Figure 5.6(D).

(5) Position 5F (Pipe Horizontal-Fixed) — The test pipe shall be placed with its axis approximately horizontal and with the welding joint vertical. The assembly shall not be rotated during welding. See Figure 5.6(E).

Part B

Types of Tests, Test Methods and Acceptance Criteria

5.7 Types and Purposes of Tests

The tests described in Part B are intended to determine the strength or degree of soundness of welds made in accordance with the specified welding procedure or the soundness of welds made by a welder, welding operator, or tack welder.[3]

5.7.1 Visual examination for appearance is required for procedure qualification and performance qualification.

5.7.2 **Mechanical Tests**

5.7.2.1 Tension tests for strength of groove welds are required for procedure qualification.

5.7.2.2 Bend tests for soundness and ductility of groove welds are required for procedure qualification and performance qualification, except as permitted in 5.7.3.

5.7.2.3 Fillet weld fracture tests for soundness of fillet welds are required for procedure and performance qualification.

5.7.2.4 A fillet weld bend test for soundness of fillet welds is required for procedure and performance qualification.

5.7.3 Radiographic examination may be used in lieu of bend tests for performance qualification of welded groove joints in wrought materials. The radiographic procedure and technique shall be in accordance with the requirements of section 6, Part B of this Code.

5.8 Visual Examination

5.8.1 **Examination Procedure.** Visual inspection of the weld surface shall be performed on the test weldment prior to cutting any mechanical test specimens except that macroetching of cut sections is included in the examination of fillet welds and partial penetration groove welds. Liquid penetrants, magnifying lenses, scales or templates may be used as aids in determining whether the sample weldment passes the criteria outlined in 5.8.2 or 5.8.3.

5.8.1.1 For detecting discontinuities that are open to the surface, liquid penetrant inspection may be used. The methods set forth in ASTM E165, *Standard Recommended Practice for Liquid Penetrant Inspection Method,* shall be used and the standards of acceptance shall be in accordance with 8.7.1, 9.7.1, or 10.8.1, whichever is applicable.

5.8.1.2 The macroetched specimen for the fillet weld test assembly or the partial penetration groove weld test assembly shall be taken from the end of the sample weldment. The macroetch specimens for fillet welded pipe, tubing, or casting groove welded assemblies shall be taken by sectioning longitudinally through the center of the pipe, tubing, or casting. One cut face of the specimen shall be smoothed and etched with a suitable etchant to give a clear definition of the weld metal and heat-affected zone.

5.8.2 **Acceptance Criteria — Visual Examination — Groove Welds, Plate and Pipe.** Unless the test weldment passes the following visual examination, the test shall have failed:

(1) Both the face and root surfaces shall be free of cracks.

(2) All craters shall be filled to the full cross section of the weld.

(3) The edges of the weld shall blend smoothly with the base metal.

(4) Underfill shall not exceed 0.01 in.

(5) The root shall show (a) complete fusion for full penetration welds, or (b) penetration equal to or greater than the weld size for partial penetration welds.

(6) The maximum melt-through on groove welds in pipe or tubing shall not exceed 1/8 in.

(7) The root concavity shall not exceed 1/16 in.

(8) Total weld thickness shall be equal to or greater than the thickness of the base metal, but the weld reinforcement shall not exceed the following:

Thickness, t in.	Maximum Reinforcement in.
$t \leq 3/8$	3/32
$3/8 < t \leq 3/4$	1/8
$t > 3/4$	3/16

5.8.3 **Acceptance Criteria — Visual Examination of Fillet Welds for Plate or Pipe.** Unless the test weldment passes the visual examination as follows, the test shall have failed:

(1) The surface of the weld shall be free from cracks.

(2) All craters shall be filled to the full cross-section of the weld.

(3) The edges of the weld shall blend smoothly with the base metal.

(4) Underfill shall not exceed 0.01 in.

(5) The leg lengths shall meet the requirements of the procedure specification.

(6) The weld shall exhibit complete fusion in the root and to the base metal by the macroetch test.

5.9 Tension Tests — Groove Welds

5.9.1 **Specimens.** Tension test specimens shall conform to one of the types illustrated in Figures 5.7, 5.9 or 5.10.

5.9.1.1 **Reduced Section Test Specimens — Plate.** Reduced section specimens from plate conforming to the requirements given in Figure 5.7 shall be used for tension tests on all thicknesses of plate.

(1) A single specimen of full plate thickness shall be used for thicknesses up to and including 1 in.

(2) For plate thicknesses greater than 1 in., single or multiple specimens may be used.

(3) When multiple specimens are necessary because of the limitations of the testing equipment, the entire thickness shall be cut

mechanically into the minimum number of approximately equal slices of a thickness that can be tested in the available equipment. Each specimen (slice) shall be tested, and collectively shall represent a single required tension test.

5.9.1.2 **Reduced Section Test Specimens — Pipe**

(1) For pipe having an outside diameter greater than 3 in., reduced section specimens conforming to the requirements given in Figure 5.7 shall be used for tension tests on all thicknesses.

(a) A single specimen of the full thickness shall be used for thicknesses up to and including 1 in.

(b) For thicknesses greater than 1 in., single or multiple specimens may be used.

(c) When multiple specimens are necessary because of the limitations of the testing equipment, the entire thickness shall be cut mechanically into the minimum number of approximately equal slices of a thickness that can be tested in the available equipment. Each specimen (slice) shall be tested and collectively shall represent a single required tension test.

(2) For pipe having an outside diameter of 3 in. or less, test specimens conforming to the requirements given in Figure 5.9 may be used for tension tests.

5.9.1.3 **Full-Section Pipe.** For pipe having an outside diameter of 3 in. or less, full-section specimens conforming to the requirements given in Figure 5.10 may be used for tension tests.

5.9.1.4 **Partial Joint Penetration Groove Welds — Plate and Pipe.** For partial joint penetration groove welds in plate and pipe, the excess material on the root side of the joint shall be removed by machining to the thickness of the weld size. Tension test specimens shall be prepared in accordance with 5.9.1.

5.9.2 **Tension Test Procedure.** Each tension test specimen shall be ruptured under tensile load and the maximum load shall be determined. The tensile strength shall be computed by dividing the maximum load by the least cross sectional area of the specimen as determined from measurements made before the load was applied.

5.9.3 **Acceptance criteria — Tension Tests — Plate and Pipe**

5.9.3.1 The tensile strength shall be no less than the applicable requirement in Table 5.1. When multiple specimens are used, as allowed in 5.9.1.1 and 5.9.1.2, each specimen (slice) shall meet the requirement.

5.9.3.2 If base metals of different tensile strengths are used, the specified minimum tensile strength of the weaker of the two, as shown in Table 5.1, applies.

5.10 Bend Tests — Groove Welds — Plate and Pipe

5.10.1 **Specimens.** Except as allowed in 5.7.3, bend test specimens shall be prepared by cutting the test weldment to form specimens of approximately rectangular cross section conforming to one of the types shown in Figures 5.11, 5.12, or 5.13. The cut surfaces shall be designated the sides of the specimen. The original surfaces of the specimen shall be called the face and root surfaces, the face surface having the greater width of weld. Bend specimens are of five types, depending on whether the axis of the weld is transverse or parallel to the longitudinal axis of the specimen and which surface (side, face, or root) is on the convex (outer) side of the bent specimen. Longitudinal bend specimens may be used in lieu of transverse bend specimens for testing combinations of base and filler materials which differ markedly in bending properties.

5.10.1.1 **Transverse Side Bend Specimen.** The weld is transverse to the longitudinal axis of the specimen which is bent so that the side surface with the larger discontinuity, if any, becomes the convex surface of the bend specimen. Transverse side bend specimens shall conform to the dimensions shown in Figure 5.11. Specimens of base metal thickness greater than 1.5 in. may be bent at full width or cut into an odd number of strips of approximately equal width so that the axis of one interior strip coincides with root of the weld. Each specimen (strip) shall be tested and, collectively, shall represent a single required bend test.

5.10.1.2 **Transverse Face Bend Specimen.** The weld is transverse to the longitudinal axis of the specimen which is bent so that the face

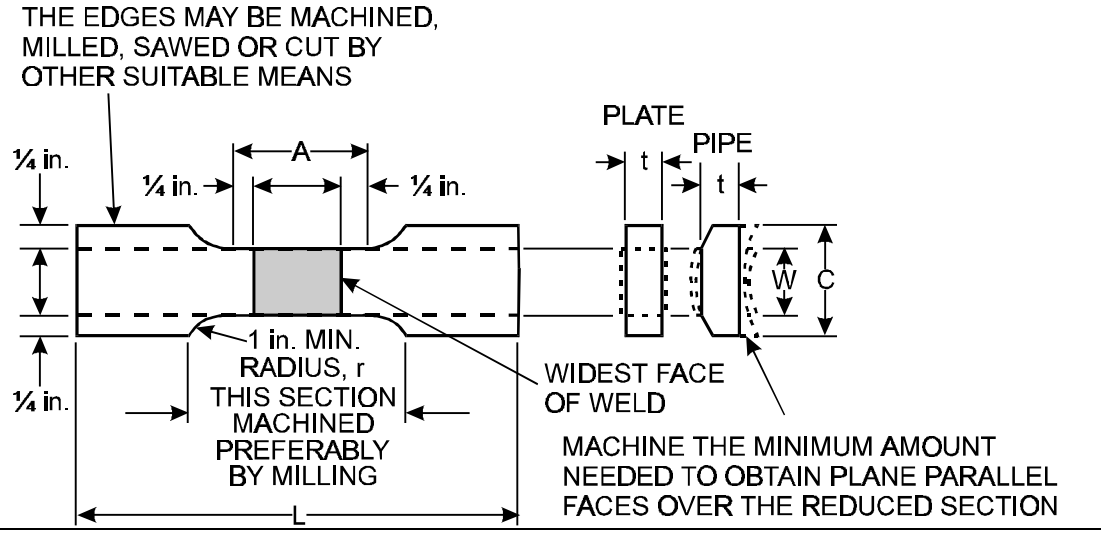

		Dimensions (in.)			
		Test plate		Test pipe	
		$T_p \leq 1$ in	T_p>1 in.	3 in. or smaller diameter	greater than 3 in. diameter or large job size pipe
A —	Length of reduced section	Widest face of weld + 1/2 in., 2-1/4 min		Widest face of weld + 1/2 in.	
L —	Overall length, min (Note 2)	As required by testing equipment		As required by testing equipment	
W —	Width of reduced section (Notes 3, 4)	1-1/2 ±0.01	1 ±0.01	1/2 ±0.01	3/4 ±0.01
C—	Width of grip section, min (Notes 4, 5)	2	1-1/2	1 approx.	1-1/4 approx.
t—	Specimen thickness (Notes 6, 7)	T_p	T_p/n (Note 7)	Maximum possible with plane parallel faces within length A	
r—	Radius of fillet, min	1	1	1	1

Notes:

1. T_p = thickness of the plate.
2. It is desirable, if possible, to make the length of the grip section large enough to allow the specimen to extend into the grips a distance equal to two-thirds or more of the length of the grips.
3. The ends of the reduced section shall not differ in width by more than 0.004 in. Also, there may be a gradual decrease in width from the ends to the center, but the width at either end shall not be more than 0.015 in. larger than the width at the center.
4. Narrower widths (W and C) may be used when necessary. In such cases, the width of the reduced section should be as large as the width of the material being tested permits. If the width of the material is less than W, the sides may be parallel throughout the length of the specimen.
5. For standard plate-type specimens, the ends of the specimen shall be symmetrical with the center line of the reduced section within 0.25 in. except for referee testing, in which case the ends of the specimen shall be symmetrical with the center line of the reduced section within 0.10 in.
6. The dimension t is the thickness of the test specimen as provided for in the applicable material specifications. The minimum nominal thickness of 1-1/2 in. wide specimens shall be 3/16 in. except as permitted by the product specification.
7. For plates over 1 in. thick, specimens may be cut into the minimum number of approximately equal strips not exceeding 1 in. in thickness. Test each strip and each strip must meet the tensile requirements.

Figure 5.7 — Reduced Section Tension Specimens — Plate and Tubing (see 5.9.1.1 and 5.9.1.2)

surface becomes the convex surface of the bent specimen. Except for pipe less than or equal to 4 in. in diameter, transverse face bend test specimens shall conform to the dimensions shown Figure 5.12.

5.10.1.3 **Transverse Root Bend Specimen.** The weld is transverse to the longitudinal axis of the specimen which is bent so that the root surface becomes the convex surface of the bent specimen. Except for pipe less than or equal to 4 in. in diameter, transverse root bend test specimens shall conform to the dimensions shown in Figure 5.12. In specimens taken from partial joint penetration welds, the root of the joint shall be the weld size and the weld assembly shall be cut to and tested at that plane.

5.10.1.4 **Subsize Transverse Face and Root Bend Specimen.** For pipe 4 in. or less in outside diameter, the width of the specimen may be ¾ in., measured around the outside surface. Alternatively, for pipe less than 2-3/8 in. in outside diameter, the width of the specimen may be that obtained by cutting the pipe into quarter sections, less the allowance for cutting. The other dimensions shall be as shown in Figure 5.12.

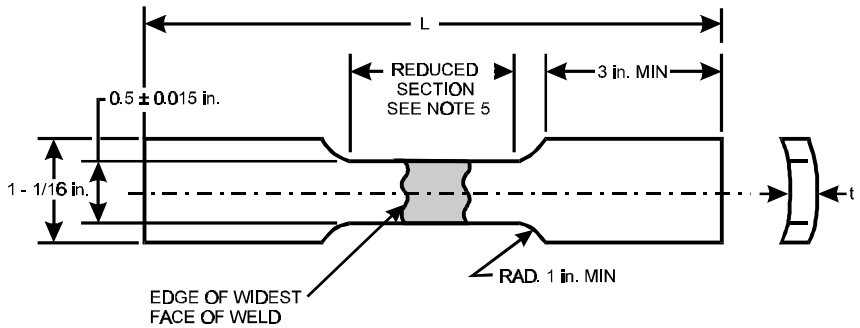

Notes:

1. Cross-sectional area = 0.5 x "t".
2. Test specimen thickness (t) shall be within the material thickness range allowed by the applicable material specification for the schedule/diameter of pipe being tested.
3. The specimen reduced section shall be parallel within 0.010 in. Specimen width may be gradually tapered provided the ends are no more than 0.010 in. wider than the center
4. Weld reinforcement shall be removed so that weld thickness does not exceed the base metal thickness.
5. The reduced section shall not be less than the width of the welds plus two "t".
6. Specimen edges shall not be arc or flame cut.

Figure 5.9 — Alternate Reduced Section Tension Specimen for Pipe [3 in. Diameter or Less] (see 5.9.1.2)

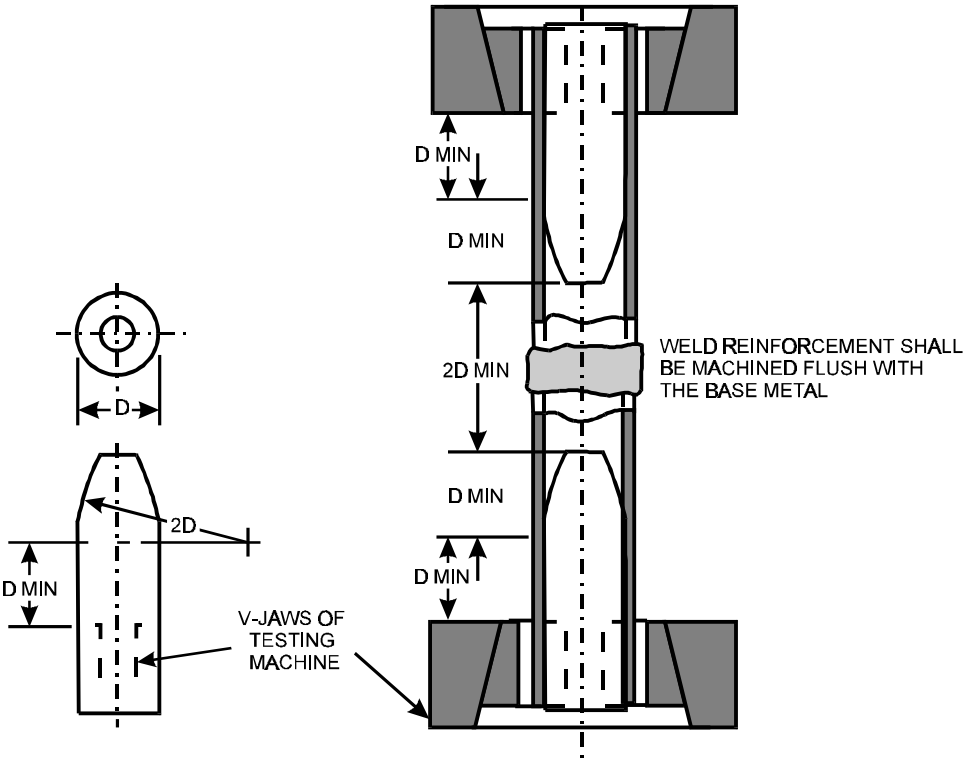

Figure 5.10 — Full Section Tension Specimens — Small Diameter Pipe [3 in. Diameter or Less] (see 5.9.1.3)

Table 5.1

Tensile Strength of Welded Aluminum Alloys (see 5.9.3.1) (GTAW or GMAW with no Postweld Heat Treatment)

Material No.	Alloy and Temper(s)	Product Thickness in in.		Minimum Tensile Strength in ksi
21	1060-0, H12, H14, H16, H18, H22,	Sheet & Plate	Up thru 3.000	8
	H24, H26, H28, H112, H113, F	Extrusions	All	8.5
21	1100-0, H12, H14, H16, H18, H22, H24, H26, H28,	All	Up thru 3.000	11
24	2219-T62, T81, T851, T8510,	All	Up thru 2 999	35
	T8511, T872219-T6, T852	Plate	3.000-6.000	35
		Forgings	3.000-4.000	35
	2519	All	All	See Note 1
21	3003-0, H12, H14, H16, H18 H22, H24, H26, H28,	All	Up thru 3.000	14
	H112, H113, F			
21	Alclad 3003-0, H12, H14, H16,	Tube	All	13
	H18, H112, H113, F, H22, H24,	Sheet & Plate	Up thru 0.499	13
	H26	Plate	0.500-3.000	14
22	3004-0, H22, H24, H26, H28, H32, H34, H36, H38,	All	Up thru 3.000	22
	H112, F			
22	Alclad 3004-0, H22, H24, H26	Sheet & Plate	Up thru 0.499	21
	H32, H34, H36, H38, H112 ,F	Plate	0.500-3.000	22
21	5005-0, H12, H14, H16, H18 H22, H24, H26, H32, H34,	All	Up thru 3.000	14
	H36, H38 H112, F			
21	5050 0, H22, H24, H26, H32, H34, H36, H38, H112, F	All	Up thru 3.000	18
22	5052-0, H22, H24, H26 H28, H32, H34, H36, H38,	All	Up thru 3.000	25
	H112, F			
25	5083-0, H111, H112,	Forgings	Up thru 4.000	38
	5083-0, H111, H112, F	Extrusions	Up thru 5.000	39
	5083-0, H112, H116, H321, F	Sheet & Plate	0.051-1.500	40
		Plate	1.501-3.000	39
	5083-0, F	Plate	3.001-5.000	38
		Plate	5.001-7.000	37
		Plate	7.001-8.000	36
25	5086-0, H32, H34, H36, H38, H111 H112 H116, F	All	Up thru 2.000	35
	5086-0, H111, H112, F	Extrusions	2.001-5.000	35
		Plate	2.001-3.000	34
27	7005,	All	All	46
	7039	Plate	All	44
	7039	Forgings	All	44
22	5154 0, H22, H24, H26, H28 H32, H34, H36, H38,	All	Up thru 3.000	30
	H112, F			
22	5254-0, H32, H34, H36, H38, H112, F	All	0.051-3.000	30
22	5454-0, H32, H34, H111, H112, F	All	Up thru 3.000	31
25	5456 0, H111, H112, F	Extrusions	Up thru 5.000	41
	5456-0, H112, H116 H321, F	Sheet & Plate	0.051-1.500	42
		Plate	1.501-3.000	41
	5465-0, H116, F	Plate	3.001-5.000	40
	5456-0, F	Plate	5.001-7.000	39
		Plate	7 001-8.000	38
22	5652-0, H22, H24, H32, H34, H112 F	All	Up thru 3.000	25
23	6005-T5	Extrusions	Up thru 1.000	24
23	6061-T4, T42, T451, T51, T6, T62, T651	All	Up thru 3.000	24
	6061-T6, T62, T651	Plate & Forgings	3.001-4.000	24
	6061-T62, T651	Plate	4.001-6.000	24
	6061-T6	Forgings	4.001-8.000	24

Table 5.1 (Continued)

Material No.	Alloy and Temper(s)	Product Thickness in in.		Minimum Tensile Strength in ksi
23	Alclad 6061-T4, T42, T451, T6, T62, T651	Sheet & Plate	Up thru 3.000	24
	Alclad 6061-T62, T651	Plate	3.001-5.000	24
23	6063-T4, T42, T5, T52, T6, T62, 683, T831, T832	Extrusions	Up thru 1.000	17
23	6351-T4, T5, T51, T53, T54, T6	Extrusions	Up thru 1.000	24
27	7005-T53	Extrusions	0.125 1.000	40
26	A201.0-T7	Castings	All	Note 1
26	354.0-T61, T62	Castings	All	Note 1
26	C355.0-T6, T61	Castings	All	Note 1
26	356.0-T6, T7, T71	Castings	All	23
26	A356.0-T6, T61	Castings	All	Note 1
26	357.0-T6, T7	Castings	All	Note 1
26	A357.0-T6, T61	Castings	All	Note 1
26	359.0-T6, T61	Castings	All	Note 1
26	443.0-F	Castings	All	17
26	514.0-F	Castings	All	22
26	535.0-F	Castings	All	35

Note:

1. Minimum as-welded tensile strength has not been established for this alloy. The tensile properties must be established by procedure qualification and approved by the Government.

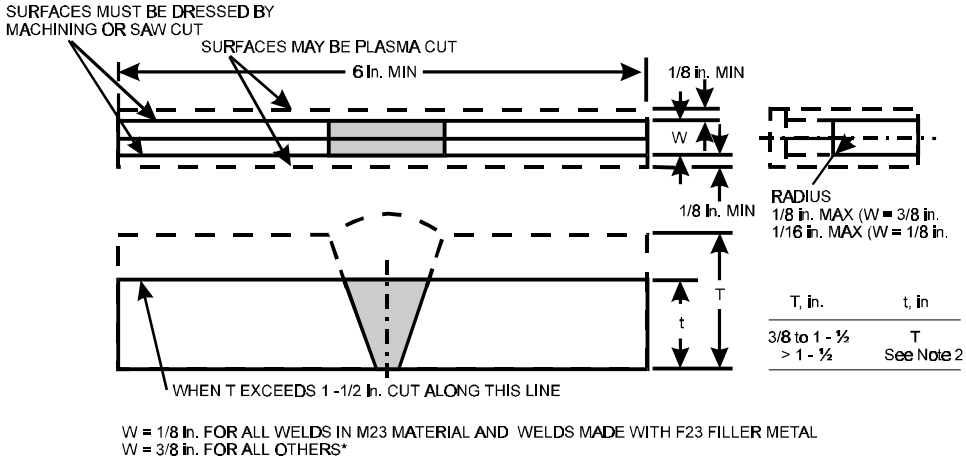

Notes:
1. Saw cut along line indicated.
2. For plates over 1 - 1/2 in. thick, cut the specimen into approximately equal strips with t between 3/4 and 1 - 1 /2 in. and test each strip.
3. May be bent full width (see requirements on jig width, 5.10.2.3).

* If M23 materials are annealed before testing they shall be tested in this thickness category.

Figure 5.11 — Transverse Side Bend Specimens (see 5.10.1.1)

5.10.1.5 **Longitudinal Face Bend Specimen.** The weld is parallel to the longitudinal axis of the specimen which is bent so that the face surface becomes the convex surface of the bent specimen. Longitudinal face bend test specimens shall conform to the dimensions shown in Figure 5.13.

5.10.1.6 **Longitudinal Root Bend Specimen.** The weld is parallel to the longitudinal axis of the specimen which is bent so that the root surface becomes the convex surface of the bent specimen. Longitudinal root bend test specimens shall conform to the dimensions shown in Figure

5.13. In specimens taken from partial joint penetration welds, the root of the joint shall be the

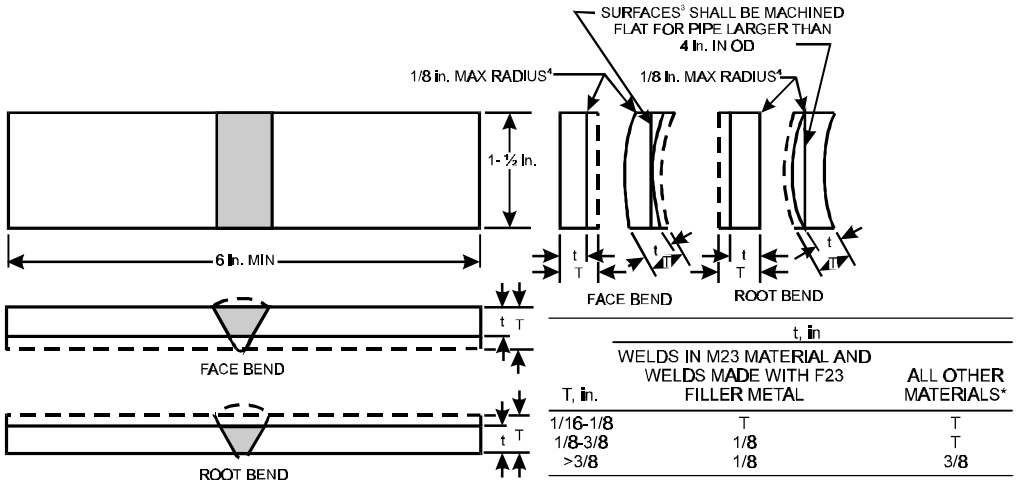

T, in.	t, in: WELDS IN M23 MATERIAL AND WELDS MADE WITH F23 FILLER METAL	t, in: ALL OTHER MATERIALS*
1/16-1/8	T	T
1/8-3/8	1/8	T
>3/8	1/8	3/8

* IF M23 MATERIALS ARE ANNEALED BEFORE TESTING, THEY SHALL BE TESTED IN THE THICKNESS LISTED IN THIS CATEGORY

Notes:

1. Weld reinforcement and backing strip or backing ring, if any, shall be removed flush with the surface of the specimen. If a recessed ring is used, this surface of the specimen may be machined to a depth not exceeding the depth of the recess to remove the ring, except that in such cases the thickness of the finished specimen shall be that specified above. Do not flame-cut nonferrous material.
2. If the pipe being tested is 4 in. outside diameter or less, the width of the bend specimen may be 3/4 in., measured around the outside surface. Alternatively, if the pipe being tested is less than 2 in. pipe size (2.375 in. outside diameter), the width of the bend specimens may be that obtained by cutting the pipe into quarter sections, less an allowance for saw cuts or machine cutting.
3. Surfaces shall be machined flat for pipe larger than 4 in. OD. Curvatures hall remain where-pipe is 4 in. or less OD.
4. R = 1/2 t max for t< 1/4 in. R = 1/8 in. max for t > 1/4 in.

Figure 5.12 — Transverse Face- and Root-Bend Specimens (see 5.10.1.2 and 5.10.1.3)

weld size, and the weld assembly shall be cut to and tested at that plane.

5.10.2 **Test Procedures — Bend Tests — Plate and Pipe.** Bend test specimens cut from M23 and M24 materials may be annealed prior to testing.[4] Bend test specimens shall be bent in a test jig that is in substantial accordance with Figure 5.14, 5.15 or 5.16.

5.10.2.1 When a plunger-type jig (Figure 5.14 or 5.15) is used, the face surface of the specimen shall be turned toward the gap of the jig for face bend tests, the root surface for root bend tests, and the side with the larger discontinuity, if any, for side bend tests. The specimen shall be centered on the jig and forced into the gap by applying a load to the plunger until, with jigs of the type in Figure 5.14, the position of the specimen is such that a 1/8 in. diameter wire cannot be inserted between the specimen and die, or with jigs of the type in Figure 5.15, the specimen is ejected from the bottom.

5.10.2.2 When a jig of the wrap-around type (Figure 5.16) is used, the face surface of the specimen is turned toward the outer roller for face bend tests, the root surface for root bend tests, and the side with the larger discontinuity, if any, for side bend tests. The specimen shall be firmly clamped on one end so that there is no sliding of the specimen on the center roller during the bending operation. The specimen shall be wrapped around the center roller by a 180° movement of the outer roller.

5.10.2.3 Where specimens wider than 1.5 in. are to be bent, the test jig mandrel shall be at least 0.25 in. wider than the specimen.

5.10.3 **Acceptance Criteria — Bend Tests — Pipe and Plate**

5.10.3.1 The weld and heat-affected zone of a transverse weld bend specimen shall be completely within the bent portion of the specimen after bending.

5.10.3.2 The convex surface of the bend test specimen shall be visually examined for surface discontinuities. For acceptance, the surface shall contain no discontinuities exceeding the following dimensions:

(1) 1/8 in. measured in any direction on the surface.

(2) 3/8 in. — for the sum of the greatest dimensions of all discontinuities exceeding 1/32 in., but less than or equal to 1/8 in. - This is based on a 1-½ in. specimen width. For other specimen widths, a proportional sum of the greatest dimensions shall apply.

(3) ¼ in. — Maximum for a corner crack, except when that corner crack resulted from a visible inclusion or other fusion-type discontinuities, then the 1/8 in. maximum shall apply.

(4) Specimens with corner cracks exceeding ¼ in. with no evidence of inclusions or other fusion type discontinuities may be disregarded and a replacement test specimen from the original weldment shall be tested.

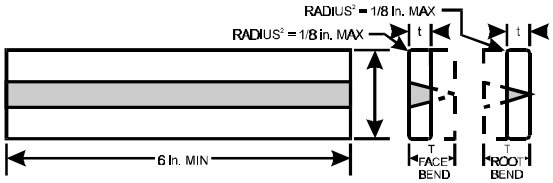

	t, in	
T, in	WELDS IN M23 MATERIAL AND WELDS MADE WITH F23 FILLER METAL	ALL OTHER MATERIALS*
1/16 - 1/8	T	T
1/8 - 3/8	1/8	T
>3/8	1/8	3/8

*IF M23 MATERIALS ARE ANNEALED BEFORE TESTING THEY SHALL BE TESTED IN THE THICKNESS LISTED IN THIS CATEGORY

Notes:

1. Weld reinforcements and backing strip or backing ring, if any, shall be removed essentially flush with the undisturbed surface of the base material. If a recessed strip is used, this surface of the specimen may be machined to a depth not exceeding the depth of the recess to remove the strip, except that in such cases the thickness of the finished specimen shall be that specified above.

2. R = 1/2 t max for t ≤ 1/4 in.
   R = 1/8 in. max for t > 1/4 in.

Figure 5.13 — Longitudinal Face- and Root-Bend Specimens (see 5.10.1.5 and 5.10.1.6)

5.11 Soundness Tests - Fillet Welds

5.11.1 Specimens

5.11.1.1 **Option 1 — Fillet Weld Fracture Test — Pipe and Plate.** The dimensions and preparation of fillet weld test weldments shall conform to the requirements shown in Figure 5.17 or 5.18. The test weldment for plate (Figure 5.17) shall be cut to provide two 4 in. center sections. The ends should be retained for macro-etch specimens, if required. (See Table 5.5). The test weldment for pipe (Figure 5.18) shall be cut into four or more sections, transverse to the welds.

5.11.1.2 **Option 2 — Fillet Weld Root Bend Test — Plate.** The dimensions and preparation of the fillet weld test specimens shall conform to the requirements in Figure 5.19. The backing material and reinforcement shall be removed flush with the base metal.

All M23 materials and all materials welded with F23 filler metals shall have the face side removed to provide a 1/8 in. thick bend specimen as shown in Figure 5.12.

5.11.2 Fillet Weld Soundness— Test Procedures

5.11.2.1 **Option 1 — Fracture Test — Pipe and Plate**. The specimen load shall be steadily applied or by repeated blows until it breaks or folds flat on itself.

5.11.2.2 **Option 2 — Root Bend Test — Plate.** The specimen shall be loaded in such a way that the root of the weld becomes the convex surface of the bent specimen. The testing procedure for fillet weld root bend specimens shall be the same as for groove welds in 5.10.2.

5.11.3 Fillet Weld Soundness — Acceptance Criteria

5.11.3.1 **Option 1 — Fracture Test — Pipe and Plate.** If the specimen folds flat on itself, the specimen shall have satisfactorily passed the test. If the specimen fractures, the broken surface shall be examined visually. To pass, it shall show complete fusion to the root of the joint, and shall exhibit no inclusion or porosity larger than 3/32 in. in the greatest dimension. The sum of the greatest dimensions of all inclusions and porosity shall not exceed ¾ in. in each 4 in. segment.

5.11.3.2 **Option 2 — Root Bend Test — Plate.** The specimen shall conform to the root bend criteria for groove welds.

5.12 Radiographic Examination

(Optional for performance qualification groove welds, plate)

5.12.1 **Examination Procedure.** The radiographic procedure and technique shall be in accordance with the requirements of Part B, section 6. Exclude 1-¼ in. at each end of the weld from evaluation in the plate test. Welded test pipe or tubing 4 in. in diameter or larger shall be examined for a minimum of one-half of the weld perimeter selected to include a sample of all positions welded. (For example. a test pipe or

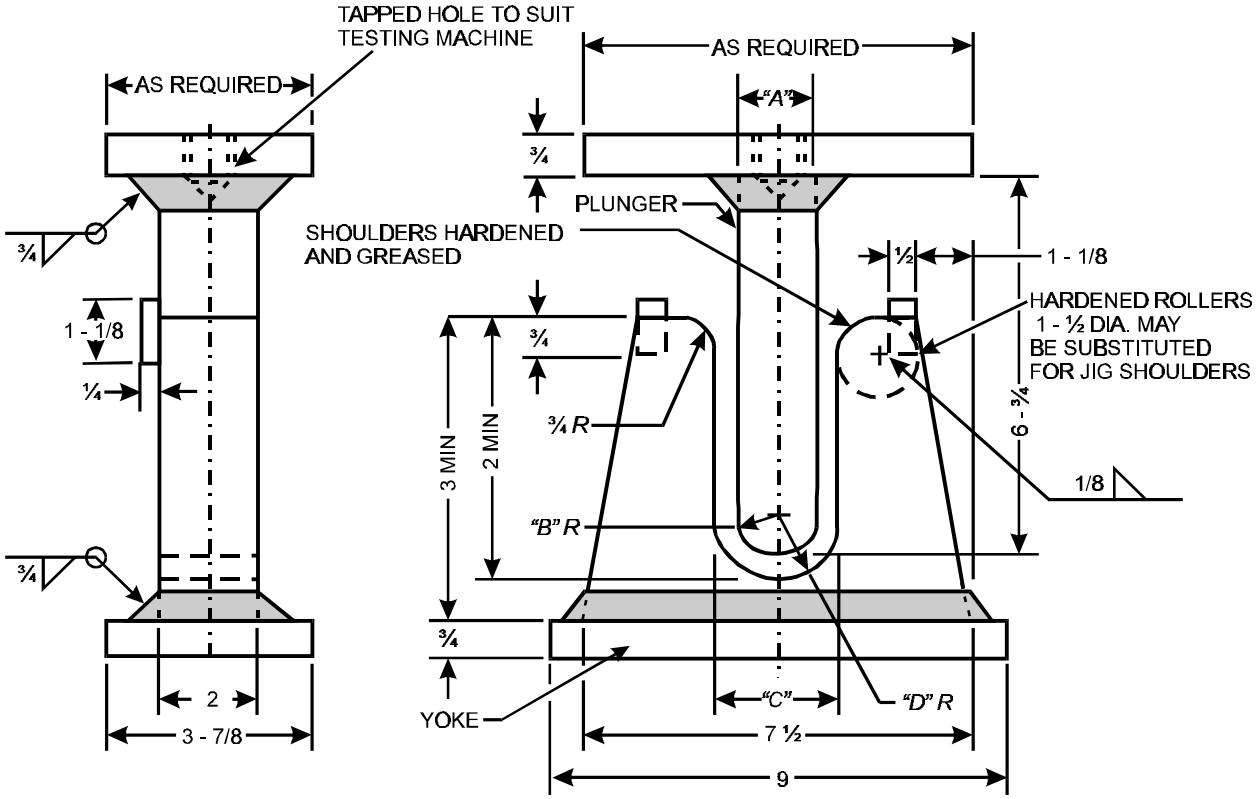

THICKNESS OF SPECIMEN (in.)	A, in.	B, in.	C, in.	D, in.	MATERIALS[4]
3/8 t	1 - 1/2 4t	3/4 2t	2 - 3/8 6t + 1/8	1 - 3/16 3t + 1/16	M21 and M22`
1/8 t(<1/8)	2 - 1/16 16 - 1/2 t	1 - 1/32 8 - 1/4t	2 - 3/8 18 - 1/2t + 1.16	1 - 3/16 9 - 1/4t +1/32	M23 and F23 Welds[1]
3/8 t	2 - 1/2 6 - 2/3t	1 - 1/4 3 - 1/3t	3 - 3/8 8 - 2/3t + 1/8	1 - 11/16 4 - 1/3t + 1/16	M25[2]
3/8 t	3 8t	1 - 1/2 4t	3 - 7/8 10t +1/8	1 - 15/16 6t + 1/16	M24[3] and M27

1. For any weldment made with F23 filler metal, the bend test specimen may be reduced to 1/8 in. in thickness, the corner radius "R" reduced to 1/16 mm maximum, and the specimen shall be bent as prescribed for as-welded M23 materials.
2. Includes annealed specimens of M23 materials.
3. M24 specimens are annealed prior to bend testing;
4. For M26 materials, See 5.17.1 or 5.25.1.

Figure 5.14 — Plunger-Type Guided Bend Jig (see 5.10.2.1)

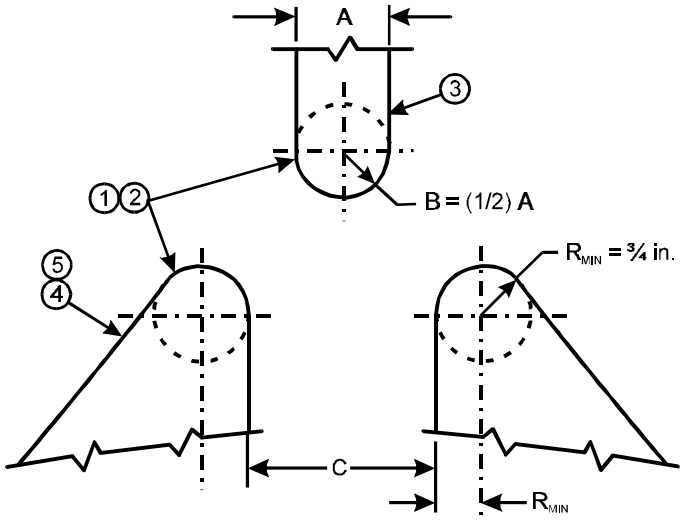

SPECIMEN THICKNESS	A	B	C	MATERIALS[10]
3/8 t	1 - 1/2 4t	3/4 2t	2 - 3/8 6t + 1/8	M21 and M22
1/8 t(<1/8)	2 - 1/16 16 - 1/2t	1 - 1/32 8 - 1/4t	2 3/8 18 - 1/2t + 1/16	M23 and F23 Welds[7]
3/8 t	2 - 1/2 6 - 2/3t	1 - 1/4 3 - 1/3t	3 - 3/8 8 - 2/3t + 1/8	M25[8]
3/8 t	3 8t	1 - 1/2 4t	3 - 7/8 10t + 1/8	M24[9] and M27

1. Either hardened and greased shoulders, or hardened rollers free to rotate shall be used.
2. The shoulders or rollers shall have a minimum bearing surface of 2 in. (51 mm) for placement of the specimen. The rollers shall be high enough above the bottom of the jig so that the specimens will clear the rollers when the ram is in the low position.
3. The ram shall be fitted with an appropriate base and provision made for attachments to the testing machine, and shall be of a sufficiently rigid design to prevent deflection and misalignment while making the bend test. The body of the ram may be less than the dimensions shown in column A.
4. If desired, either the rollers or the roller supports may be made adjustable in the horizontal direction so that specimens of varied thickness may be tested on the same jig.
5. The roller supports shall be fitted with an appropriate base designed to safeguard against deflection or misalignment and equipped with means for maintaining the rollers centered, midpoint and aligned with respect to the ram.
6. The weld and heat-affected zone in the case of a transverse-weld bend specimen shall be completely within the bend portion of the specimen after testing.
7. For any weldment made with F23 filler metal, the bend test specimen may be reduced to 1/8 in. mm in thickness, the corner radius "R" reduced to 1/16 in. maximum, and the specimen shall be bent as prescribed for as-welded M23 materials.
8. Includes annealed specimens of M23 materials.
9. M24 material specimens are annealed prior to bend testing.
10. For M26 materials, see 5.17.1 or 5.25.1.

Figure 5.15 — Roller-Type Guided Bend Jig (see 5.10.2.1)

tube welded in the 5G, 6G, or 6GR position shall be radiographed from the top centerline to the bottom centerline on either side.) Welded test pipe or tubing less than 4 in. in diameter shall require 100% radiography.

5.12.2 **Radiographic Examination — Acceptance Criteria.** When the radiographic option is used for performance qualification, the acceptability is defined in (1) through (6) as follows:

(1) Assorted porosity is acceptable, provided that the combination of the various sizes does not exceed the total area of indications permitted for a 3 in. length of weld.

(2) The total area of porosity as determined from the radiographic film shall not exceed 0.067E square inches in any 3 in. length of weld, where E is the weld size. If the weld is less than 3 in. long, the total allowable

area of porosity shall be reduced in direct proportion.

(3) The maximum dimension of porosity shall be 27% of E. or 1/8 in., whichever is smaller except that an isolated indication separated from an adjacent large indication by 1 ¼ in. or more may be E/3, or ¼ in., whichever is less.

(4) Aligned porosity shall be acceptable provided that the sum of the major dimensions of the indication is not more than E/2 in a length of 6E, or 3 in., whichever is less. A sequence of four or more pores shall be considered to be aligned when they touch a line parallel to the length of the weld drawn through the center of the outer pores.

(5) Inadequate joint penetration length shall not exceed 20% of the length of the weld.

(6) Incomplete fusion shall not be acceptable, except in a fillet weld root area under the following condition: incomplete fusion in the fillet weld root area may be classified as inadequate joint penetration when it is less than 20% of the weld size, E.

Part C

Procedure Qualification

5.13 General

Procedure qualification shall be conducted by the contractor or manufacturer. The procedure qualification tests required In Part C are devised to determine the strength and degree of soundness of welds made by a specific welding procedure.

5.13.1 **Contractor's or Manufacturer's Responsibility.** Each contractor or manufacturer shall list in a document, known as the "welding procedure specification (WPS)," the conditions applicable to the welding that shall be performed under this Code. Each contractor or manufacturer shall do the following:

(1) Qualify the WPS by welding test weldments.

(2) Test the specimens taken from the test weldments, as required in this section.

(3) Record the welding data and test results in a document known as a "procedure qualification record (PQR)." See the Appendix. A WPS may require the support of more than one PQR.

5.13.2 **Welding Procedure Specification (WPS).** The welding procedure specification (WPS) shall list in detail the group numbers of the base metals to be joined, the filler metal(s) to be tested, the range of preheat and post-weld heat treatments, thicknesses, and other variables associated with the welding process. Copies of the WPS shall be available for the guidance of the welders, welding operators, or tack welders and the authorized inspector(s). A recommended shall certify that each welding procedure specification has been qualified by meeting the acceptance criteria of the procedure qualification test(s) and that the test results have been documented with the necessary Procedure Qualification Record(s) (PQR). A change in any essential variable outside the allowable limits shall require qualification of the altered procedure and associated PQR.

5.13.3 **Procedure Qualification Record (PQR).** The specific values of conditions involved in developing a WPS shall be recorded in a form called the Procedure Qualification Record (PQR). This form shall record the essential variables of the specific welding procedure and the test results. This document shall be certified by the contractor or manufacturer and shall be available for examination by the authorized inspector(s). A recommended form is given in the Appendix. The Government shall approve any PQR that supports welding in accordance with section 10 of this Code. All other PQRs and any WPS shall be approved by the manufacturer.

The Government shall approve any Procedure Qualification Record (PQR) that supports welding in accordance with Section 10 of this code. All other PQRs and any WPS shall be approved by an AWS CWI.

5.13.4 **Combination of Welding Procedures.** More than one procedure may be used in a single production joint, provided each procedure used is qualified either separately or in combination with the other procedure(s) within the thickness limits specified in Tables 5.3, 5.4, or 5.5, as applicable, for each of the procedures.

5.14 Limits of Qualified Positions for Procedures

To reduce the number of welding procedure qualifications that may be required, qualification under certain conditions also qualifies for other

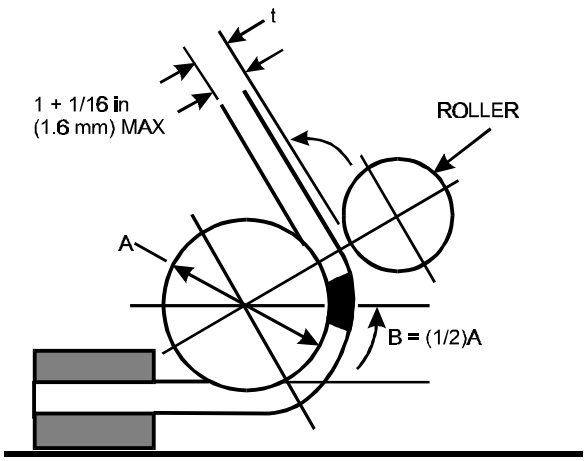

THICKNESS OF SPECIMEN, in.	A, in.	B, in.	MATERIALS[7]
3/8 t	1 - 1/2 4t	3/4 2t	M21 and M22
1/8 t (<1/8)	2 - 1/16 16 - 1/2t	1 - 1/32 8 - 1/4t	M23 and F23 Welds[4]
3/8 t	2 - 1/2 6 - 2/3t	1 - 1/4 3 - 1/3t	M25[5]
3/8 t	3 8t	1 - 1/2 4t	M24[6] and M27

1. Dimensions not shown are the option of the designer. The essential consideration is to have adequate rigidity so that the jig parts will not spring.
2. The specimen shall be firmly clamped on one end so that there is no sliding of the specimen during the bending operation.
3. Test specimens shall be removed from the jig when the outer roll has been removed 180 degrees from the starting point.
4. For any weldment made with F23 filler metal, the bend test specimen maybe reduced to 1/8 in. in thickness, the corner radius "R" reduced to 1/16 in. maximum, and the specimen shall be bent as prescribed for as-welded M23 materials.
5. Includes annealed specimens of M23 materials.
6. M24 material specimens are annealed prior to bend testing.
7. For M26 materials, see 5.17.1 or 5.25.1.

Figure 5.16 — Wrap-Around Guided Bend Jig (see 5.10.2.3)

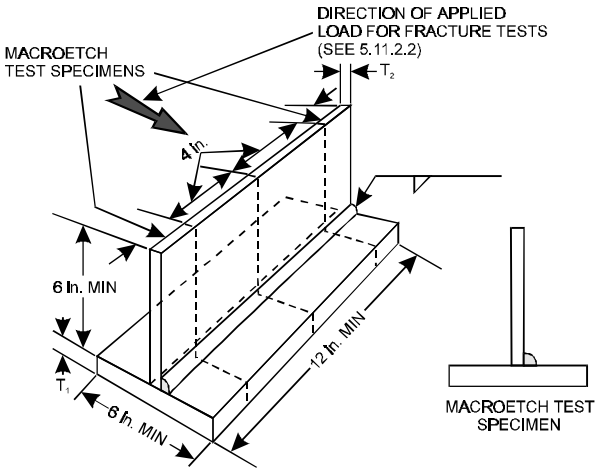

WELD SIZE	T_1 MIN*	T_2 MIN*
3/16	1/2	3/16
1/4	3/4	1/4
5/16	1	5/16
3/8	1	3/8
1/2	1	1/2
5/8	1	5/8
3/4	1	3/4
>3/4	1	1

* Note: Where the maximum plate thickness used in production is less than the value shown in the table, the maximum thickness of the production pieces may be substituted for T_1 and T_2.

Figure 5.17 — Fillet Weld Soundness Test for Procedure Qualification — Option 1 — Plate (see 5.11.1.1)

conditions as shown in Table 5.2 and enumerated in the following paragraphs.

5.14.1 Procedure qualification on pipe shall also qualify for plate, but not vice versa, except that qualification on plate in the 1G (flat) position or 2G (horizontal) position shall qualify for welding pipe over 24 in. (610 mm) in diameter in the 1G (flat) or 1G and 2G horizontal positions, respectively.

5.14.2 Procedure qualification of pipe in the 5G (pipe horizontal fixed) position qualifies the procedure for flat, vertical and overhead position groove and fillet welding of plate and pipe.

5.14.3 Procedure qualification of pipe in the 6G (inclined fixed) position qualifies the procedure for all position groove welding of plate and pipe, but does not qualify the procedure for groove and fillet welding of T-, Y- and K- connections.

5.14.4 Procedure qualification of T-, Y- and K-connections also qualifies the procedure for groove and fillet welding in all positions of plate and pipe.

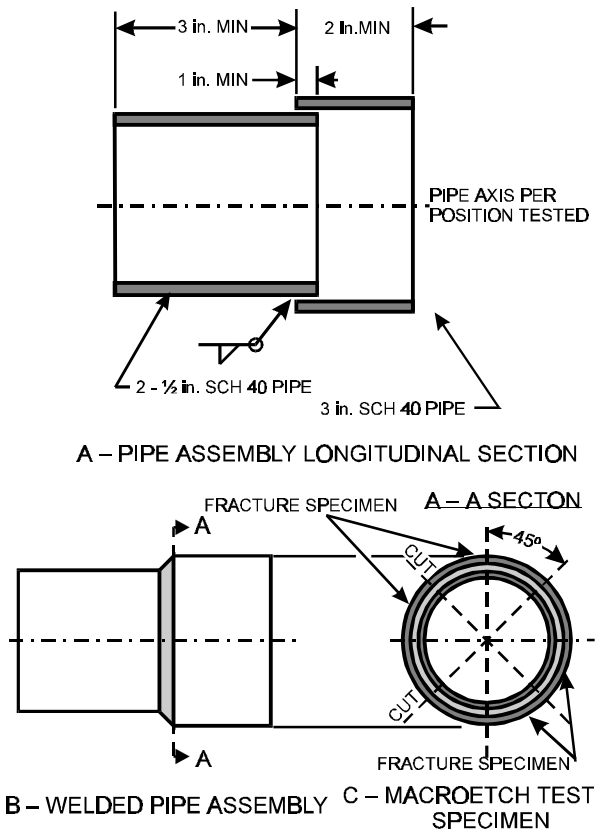

Figure 5.18 — Fillet Weld Soundness Test for Procedure Qualification — Option 1 — Pipe (see 5.11.1.1)

5.15 Preparation of Test Weldment — Procedure Qualification

5.15.1 **Base Metal and Filler Metal.** The base metal(s) and filler metal(s) shall be as listed in the WPS. The dimensions of the test weldment shall be sufficient to provide the required test specimens. The base metals may be in the form of plate, pipe, tube, or other commercial product forms as listed in the WPS.

5.15.2 **Joint Preparation.** The edge preparation of the test weldment shall be as described in the WPS.

5.15.3 **Cleaning Procedure.** The test weldment shall be cleaned by means of the cleaning procedure(s) described in the WPS.

5.16 Limitation of Variables — Procedure Qualification

Changes greater than the limits set below or where no limits are given shall be considered essential changes in a WPS (see the Appendix) and shall require qualification of the altered procedure.

(1) A change in the base metal from one M-number group to another, as defined in 1.3.1.2

(1a) The M-number of modified procedures shall be as in the “modified” WPS

(2) A change in the filler metal from one F-number group to another, as defined in 1.3.2.2

(3) A change in the welding process as specified in 1.4.

(4) A change in the nominal size of the diameter of the filler of more than 1/64 in.

(5) A change of more than ±20% in the arc voltage or amperage.

(5a) A change in “modified” procedure qualifications of more than:

(a) -15% to -5% for ½ T

(b) 0 to +10% for T

(c) +10% to +20% for 2 T in current or voltage

(6) A change of more than 25% above or below the specified mean travel speed for mechanized or automated welding processes.

(7) For heat treatable alloys (M23, M24, M26 and M27), an increase of 100° F in the specified preheat or specified maximum interpass temperature

(8) The addition or deletion of filler metal.

The addition or deletion of consumable inserts or a change in the method by which filler metal is added, such as preplacing wire or buttering.

(10) For a specified groove, a change of more than 25% in the number of passes. If the cross sectional area of the groove is changed, it is permissible to change the number of passes in proportion to the area

(11) The addition of positions other than already qualified.

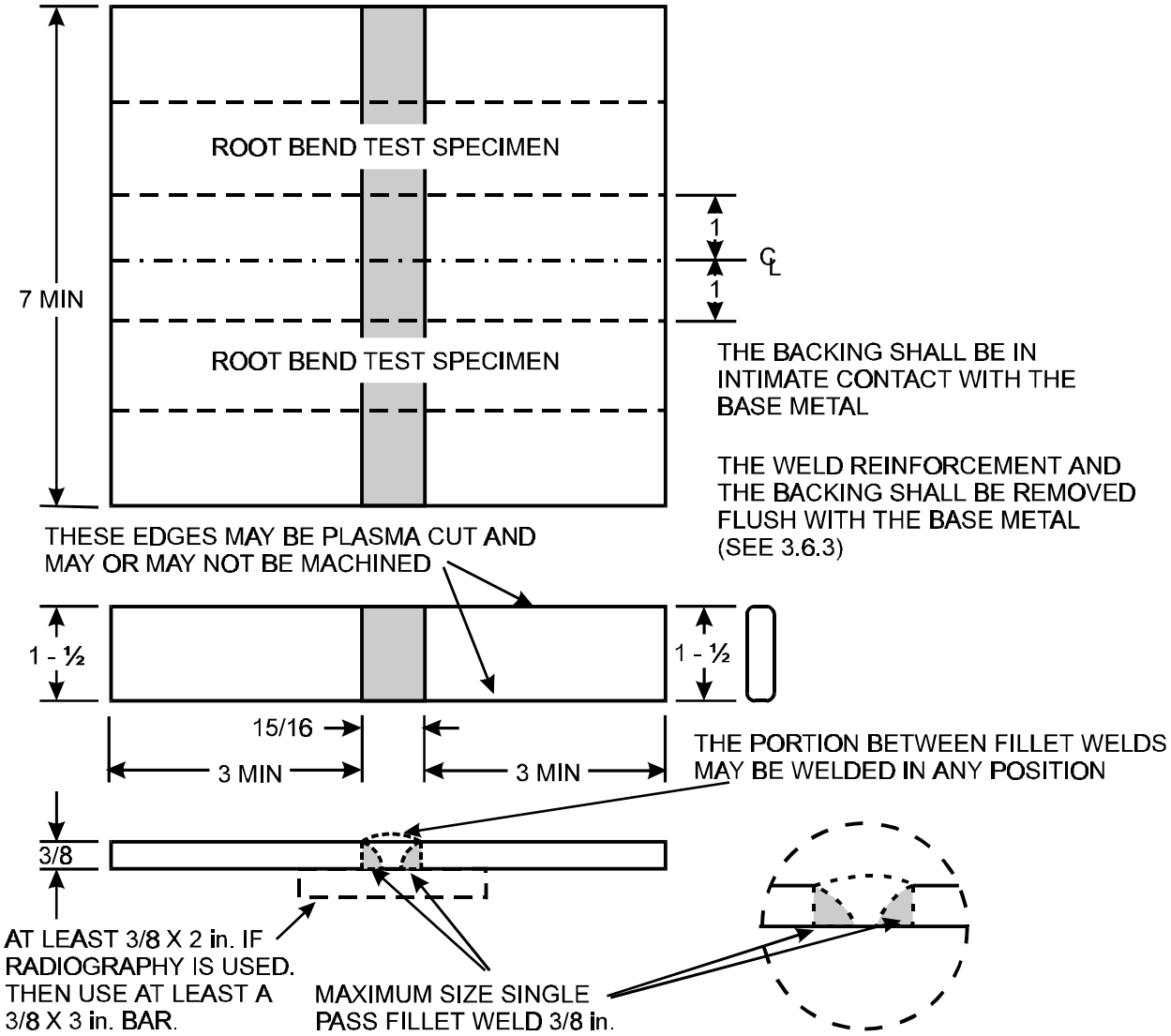

Figure 5.19 — Fillet Weld Soundness Test for Procedure Qualification — Option 2 — Root Bend Test — Plate (see 5.11.3.2)

(12) A change from vertical up to vertical down and vice versa. Note restrictions of 4.13.1.4

(13) A change from forehand to backhand technique. Note restrictions of 4.13.1.5

(14) For a change in groove type:

(a) A change in the type of groove (a change from a V-groove to a U-groove, for example), except qualification of a complete joint penetration groove weld qualifies for any groove detail which complies with the requirements of Appendix B.

(b) A change in the type of groove to a square groove or vice versa, or a decrease of 5º in the specified groove angle.

(15) A change from a single shielding gas to any other gas or to a mixture of gases or a change of 10% or more in the specified percentage composition of the mixture.

(16) An increase of 50% or more or a decrease of 20% or more in the rate of flow of the shielding gas.

Table 5.2

Procedure Qualification - Type and Position Limitations (see 5.14)

Qualification Test		Type of Weld and Position of Welding Qualified *			
		Plate		Pipe	
Weld	Plate or Pipe Positions**	Groove	Fillet	Groove	Fillet
Plate-groove Complete joint penetration	1G	1G	1F	1G(Note 1)	1F(Note 1)
	2G	1G, 2G	1F, 2F	1G, 2G (Note 1)	1F, 2F (Note 1)
	3G	1G, 3G	1F, 3F		
	4G	1G, 4G	1F, 4F		
Plate-groove Partial joint penetration	1G	1G	1F	1G(Note 1)	1F(Note 1)
	2G	2G	1F, 2F	1G, 2G (Note 1)	1F, 2F (Note 1)
	3G	3G	3F		
	4G	4G	4F		
Plate-fillet	1F		1F		1F(Note 1)
	2F		1F, 2F		1F, 2F (Note 1)
	3F		3F		5F(Note 1)
	4F		4F		4F (Note 1)
Pipe-groove Complete joint penetration	1G	1G	1F	1G	1F
	2G	1G, 2G	1F, 2F	1G, 2G	1F, 2F
	5G	1G, 3G, 4G	1F, 2F, 3F	1G, 2G, 5G	All
	6G	1G, 2G, 3G, 4G	All	1G, 2G, 5G 6G	All
	6GR	All	All	All (Note 2)	All
Pipe-fillet	1F		1F		1F
	2F, 2FR		1F, 2F		1F, 2F
	4F		1F, 2F, 4F		1F, 2F, 4F
	5F		All		All

Notes:
1 Qualifies for welding pipe or tubing over 24 in. (610 mm) in diameter.
2. Qualifies for T-, Y-, and K-connections and for complete joint penetration groove welds in all positions
* Positions of welding: F = Flat, H = Horizontal, V = Vertical, OH = Overhead.
** See Figures 5.3, 5.4, 5.5 and 5.6.

(17) A change from AC to DC or vice versa; in DC welding a change from electrode negative to electrode positive or vice versa.

(18) A change from conventional to pulsed type current welding power supply, or vice versa

(19) For heat treatable alloys (M23, M24, M26, and M27), a change from the stringer-bead technique to a weave bead technique, but not vice versa.

(20) A change in the type of initial and interpass cleaning (mechanical, chemical, etc.)

(21) A change from single electrode to multiple electrode, or vice versa.

(22) A change in the spacing of multiple electrodes.

(23) The omission, but not inclusion of backgouging.

(24) A change in thickness beyond the limitations of the “qualified range” as shown in Table 5.3, 5.4, or 5.5, as applicable.

(25) A change of more than 1/16 in. in the root opening when backing is not used.

(26) A change in permanent backing material from one “M” number of aluminum to another “M” number aluminum. Note restrictions in 8.2.4, 9.2.4, and 10.2.3.

(27) For GTAW, any change in the electrode diameter greater than ±1/32 in.

5.17 Tests — Procedure Qualification

5.17.1 The following are required tests for groove welds:

(1) Visual examination for visual quality and dimensions.

(2) Macroetch test for soundness and weld size in partial joint penetration groove welds.

(3) Tension test for strength, except castings.

(4) Bend test for soundness and ductility, except castings.

(5) When welding castings to other castings or wrought material, the bend test for soundness and ductility of groove welds and fillet welds shall be omitted, and a macroetch test for weld soundness shall be conducted.

5.17.2 The following are required tests for fillet welds:

(1) Visual examination for appearance and dimensions.

(2) Macroetch test for penetration.

(3) Fracture test for soundness or root bend test for soundness, except castings

5.17.3 Test Specimens: Number, Type and Preparation

5.17.3.1 The type and number of specimens that shall be tested to qualify a welding procedure for complete joint penetration groove welds on plate, pipe, or tubing are shown in Table 5.3, together with the range of thicknesses qualified for use in construction. The range is based on the thickness of the plate, pipe or tubing used in making the qualification.

5.17.3.2 The type and number of specimens that shall be tested to qualify a welding procedure for partial joint penetration groove welds are shown in Table 5.4. A sample weld shall be made using the type of groove design and joint welding procedure to be used in construction, except the depth of groove need not exceed 1 in. If the partial joint penetration groove weld is to be used for corner or T-joints, the butt joint shall have a temporary restrictive plate in the plane of the square face to simulate the T-joint configuration.

5.17.3.3 When a joint welding procedure has been qualified for a complete joint penetration groove weld and is applied as the welding procedure for a partial joint penetration groove weld falling within the limitation of variables, three macroetch specimens are required.

5.17.3.4 The type and number of specimens that shall be tested to qualify a welding procedure for fillet welds are shown in Table 5.5.

5.17.4 Location of Removal of Test Specimens for Procedure Qualification. One sample weldment of sufficient size to obtain the number of test specimens required by Table 5.3, 5.4 or 5.5, as applicable, shall be prepared in accordance with the welding procedure specification.

5.17.4.1 **Test Specimens — Groove Welds — Plate.** The order of removal of test specimens shall conform to Figure 5.20(A), 5.20(B) or 5.20(C). Complete joint penetration groove welds made on plates ¾ in. or greater in thickness which are welded using two-side welding techniques shall be tested using the test specimens in Figure 5.20(B). Partial joint penetration groove welds made on plates 3/8 in, or greater in thickness shall be tested with the unfused side machined off to the depth of the effective weld size. For base metals and combinations of base and filler metals which differ significantly in ductility, test specimen coupons as shown in Figure 5-20(C) shall be used.

5.17.4.2 **Partial Joint Penetration Groove Welds — Plate or Pipe.** The type and number of specimens that shall be tested to qualify a welding procedure are shown in Table 5.4. A sample weld shall be made using the type of groove design and joint welding procedure to be used in construction, except the depth of groove need not exceed 1 in.

If the partial joint penetration groove weld is to be used for corner or T-joints, the butt joints shall have a temporary restrictive plate in the plane of the square face to simulate the T-joint configuration. The sample weld shall be tested as follows:

(1) When a joint welding procedure has been qualified for a complete joint penetration groove weld and is applied to the welding conditions of a partial joint penetration groove weld, three macroetch cross section test specimens are required; there shall be one specimen from each end of the sample weldment, and one from the center.

(2) If a joint welding procedure is not covered by (1), then a sample weldment shall be prepared and a macroetch test specimen made to determine the weld size. Then the excess material is machined off the bottom side of the joint to the thickness of the weld size.

Tension and bend specimens shall be prepared and tests performed, as required for complete joint penetration groove welds.

5.17.4.3 **Test Specimens — Groove Welds. — Pipe.** The order of removal of test specimens shall conform to Figure 5.21, 5.22 or 5.24.

5.17.4.4 **Test Specimens — Fillet Welds.** The number and type of test specimens that shall be tested to qualify a welding procedure are

Table 5.3
Number and Type of Test Specimens and Range of Thickness Qualified — Procedure Qualification; Complete Joint Penetration Groove Welds (see 5.17.3.1)

1. Tests on Plate

Plate Thickness (T) Tested, in.	Number of Sample Welds per Position	Visual Inspection	Test Specimens Required: Reduced Section Tension (see Figure 5.7)	Root Bend (see Figures 5.12, 5.13)	Face Bend (see Figures 5.12, 5.13)	Side Bend (see Figure 5.11)	Plate Thickness Qualified, in.
T< 1/8	1[(2)]	Yes	2	2	2		T to 2T
1/8 ≤ T ≤ 3/8	1	Yes	2	2	2		T/2 to 2T
Over 3/8 and under 1	1	Yes	2			4	T/2 to 2T
1 and over	1	Yes	2			4	T/2 to unlimited

2. Tests on Pipe or Tubing

Weld Type	Pipe or Tube Size of Sample Weld: Diam., in in.	Pipe or Tube Size of Sample Weld: Wall, t, of Wrought, in	Number of Sample Welds per Position	Visual Inspection	Test Specimens Required: Macro-etch Test	Reduced Section Tension (see Figures 5.7, 5.9, 5.10)	Root Bend (see Figure 5.12)	Face Bend (see Figure 5.12)	Pipe or Tubing Diameter Qualified, in: Min	Pipe or Tubing Diameter Qualified, in: Max	Wall Thickness Qualified, in: Min	Wall Thickness Qualified, in: Max
Wrought to Wrought	6 through 8	1/8 – 3/8	1	Yes	—	2	2	2	3/4	16	1/8	3/8
Cast to Wrought or Cast to Cast	3 through 5	3/16	1	Yes	2	—	—	—	2	16	1/8	1/2

3. Tests on Pipe or Tubing

Diam.	Pipe Size of Sample Weld: Wall Thickness, T	Number of Welds per Position	Visual Inspection	Test Specimens Required: Reduced Section Tension (see Figures 5.7, 5.9,)	Root Bend (see Figure 5.12)	Face Bend (see Figure 5.12)	Side Bend (see Figure 5.11)	Pipe or Tubing Diameter Qualified, in: Diam	Wall Thickness l Qualified, in: Min	Wall Thickness l Qualified, in: Max
2 in or 3 in.	Sch. 80 Sch. 40	2	Yes	2	2	2	—	3/4 through 4	1/8	1/2
6 in or 8 in	Sch. 120 Sch. 80	1	Yes	2	—	—	4	4 and over	0.187	Any
Job Size Pipe or Tubing										
<24 in.	T < 1/8	1[(2)]	Yes	2	2	2	—	Test diam. & over	T	2T
	1/8 ≤ T ≤ 3/8 in.	1[(2)]	Yes	2	2	2	—	Test diam. & over	1/8	2T
	3/8 < T < 3/4	1[(2)]	Yes	2	—	—	4	Test diam. & over	T/2	2T
	T ≥ 3/4 in,	1[(2)]	Yes	2	—	—	4	Test diam. & over	.375	Any
≥ 24 in.	1/8 ≤ T ≤ 3/8 in.	1	Yes	2	2	2	—	Test diam. & over	1/8	2T
	3/8 < T < 3/4	1	Yes	2	—	—	4	24 & over	T/2	2T
	T ≥ 3/4 in,	1	Yes	2	—	—	4	24 & over	.375	Any

Notes:
1. All welded test pipes or tubing shall be visually inspected (see 5.8).
2. Adequate number of test welds per position must be made to obtain required test specimens.

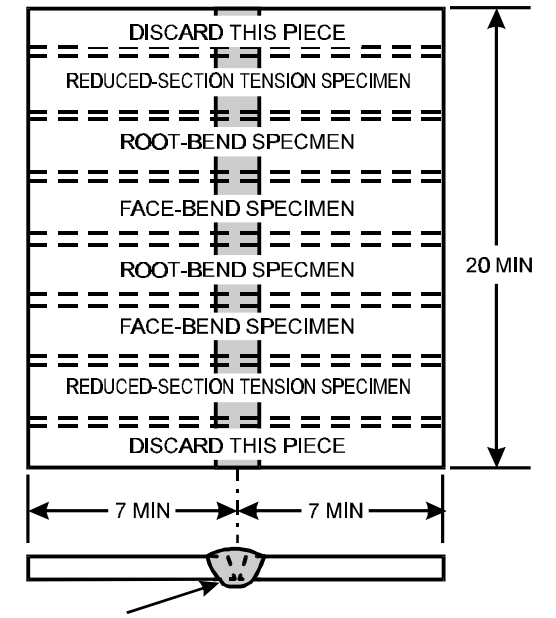

(A) PLATES THROUGH 3/8 in. PROCEDURE QUALIFICATION

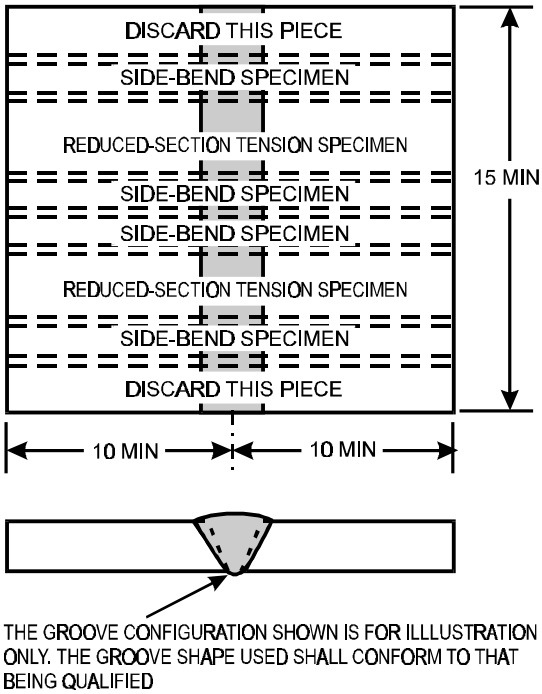

(B) PLATES OVER 3/8 in. PROCEDURE QUALIFICATION

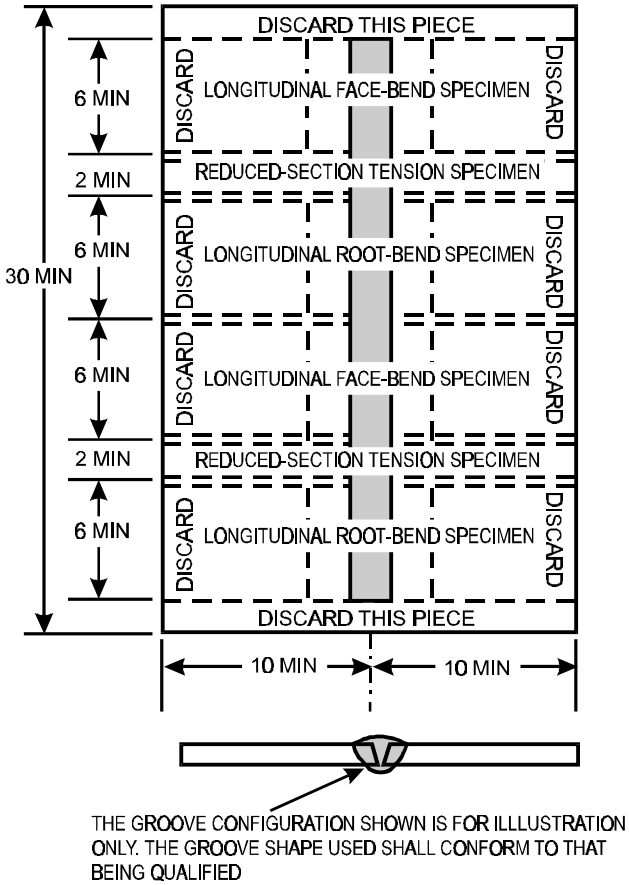

(C) PLATES — LONGITUDINAL BEND TEST SPECIMENS

Figure 5.20 — Location of Test Specimens for Procedure Qualification — Plate (see 5.17.4.1)

Table 5.4
Number and Type of Test Specimens and Range of Thickness Qualified—Procedure Qualification; Partial Joint Penetration Groove Welds (see 5.17.3.2)

			Test Specimens Required			
				Tension and Bend Test		
Groove Type	Groove Depth, Max	Number of Sample Welds	Macroetch for Weld Size (E)	Reduced Section Tension (see Figures 5.7, 5.9)	Side Bend (see Figure 5.11)	Plate Thickness Qualified, Max
Same as used in Construction [2]	1 in.	1	3	2	4	Unlimited

Notes:
1. All welded test plates shall be visually inspected.
2. If a partial joint penetration bevel- or J-groove weld is to be used for T-joints or a double-bevel or double-J-groove weld is to be used for corner joints, the butt joint shall have a temporary restrictive plate in the plane of the square face to simulate a T-joint configuration.

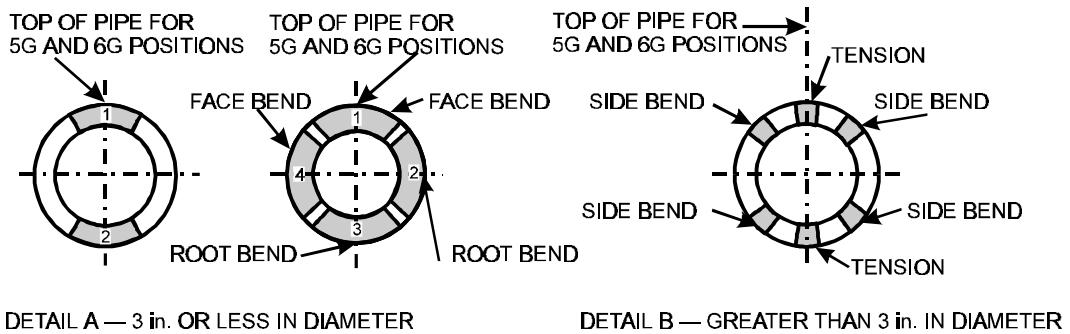

Figure 5.21 — Location of Test Specimens on Welded Test Pipe (see 5.17.4.3)

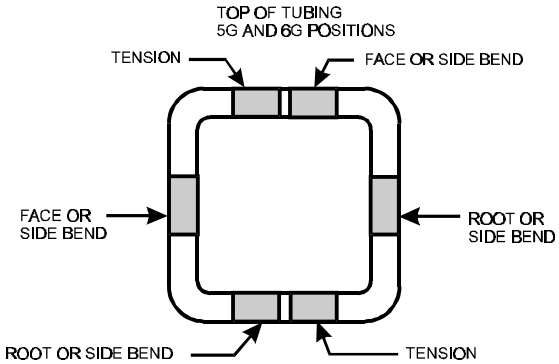

Figure 5.22 — Location of Test Specimens for Square and Rectangular Tubing (see 5.17.4.3)

shown in Table 5.5. The location of test specimens shall conform to Figure 5.17, 5.18, or 5.19, and 5.11.1.

5.17.5 **Preparation of Test Specimens.** The test specimens shall be prepared in accordance with section 5, Part B.

5.17.6 **Test Procedures.** The required tests shall be conducted in accordance with section 5, Part B.

5.17.7 **Acceptance Criteria — Groove Welds**

5.17.7.1 Visual Examination shall be in accordance with 5.8.2.

5.17.7.2 Tensile test results shall be within limits of 5.9.3 (castings excluded).

5.17.7.3 Bend test results shall be within limits of 5.10.3 (castings excluded).

Macroetch examination shall be conducted in accordance with 5.8.1.2. Partial penetration groove welds shall have the designated weld size. Complete joint penetration groove welds in cast alloy shall exhibit soundness throughout.

5.17.8 **Acceptance Criteria — Fillet Welds**

5.17.8.1 Visual examination shall be in accordance with 5.8.3.

5.17.8.2 Fracture test results shall be within the limits of 5.11.3, or fillet weld root bend test results shall be within the limits of 5.10.3, except castings.

5.17.8.3 Macroetch examination in accordance with 5.8.1.2 shall exhibit complete penetration to the root of the joint.

5.18 Retests

If any one specimen of all those tested fails to meet the test requirements for qualification, two retests of that particular type of test specimen may be performed with specimens cut from the same test weldment, or from an additional weldment made from the procedure qualification material, and WPS. Both of the retest specimens shall meet the test requirements for the procedure to be qualified.

Part D

Performance Qualification

5.19 General

Note: Welders. welding operators, and tack welders should demonstrate a knowledge of safe practices and the particular hazards of the welding process and the procedures to be used in construction.

The qualification tests described in Part D are specially devised to determine the ability of a welder, welding operator, or tack welder to produce sound welds in accordance with the specified welding procedure. These qualification tests are not intended as a guide for selecting the procedure to be used for welding during construction. The test welds shall be made in accordance with the requirements for the Welding Procedure Specification.

5.19.1 **Definitions.** For purposes of this code the following shall apply:

(1) A welder is a person who uses a manual or semiautomatic process.

(2) A welding operator is a person who operates automated equipment, but has a degree of control over setting the values of the welding conditions. The welding operator may also provide manual guidance to the equipment along a weld joint.

(3) A tack welder is a person who, under the direction of a fitter, or as a fitter, tack welds an assembly in order to hold the parts together until the final welds are made.

5.19.2 **Identification of Welders, Welding Operators, and Tack Welders.** Each qualified welder, welding operator and tack welder shall be assigned an identifying number, letter or symbol by the contractor or manufacturer, which shall be used to identify the work of that person.

5.19.3 **Record of Tests.** The essential variables of the weld procedure specification (WPS) and the test results obtained by each welder, welding operator, or tack welder shall be recorded on a of Aluminum Welder Qualification Test Record. A form for these records is given in the Appendix.

5.19.4 **Special Positions.** A contractor or manufacturer who does production welding in a special orientation may make the tests for performance qualification in this specific orientation. Such qualifications are valid only for the positions actually tested, except that an angular deviation of ±15° is permitted in the inclination of the weld axis and the rotation of the weld face, as defined in Figure 5.1 or 5.2.

5.19.5 A welder, welding operator, or tack welder who satisfactorily completes a test weldment that meets the criteria for Procedure Qualification in Part C of this section shall be considered qualified to weld joints within the type and position limitations for the qualification test weld set forth in Table 5.2 and subject to the limitation of variables for welders, welding operators, or tack welders in 5.22, 5.23, or 5.24, as applicable.

5.20 Limits of Qualified Positions for Performance

5.20.1 To reduce the number of welding performance qualifications that may be required, qualification under certain conditions also qualifies for other conditions as shown in Table 5.6 and enumerated in the following paragraphs.

5.20.2 Groove Welds — Plate

5.20.2.1 Qualification in the 1G (flat) position qualifies for flat position groove welding of plate, flat position and horizontal position fillet welding of plate, horizontal rotated (1G) position groove welding of pipe, and inclined rotated (1F) position and horizontal rotated (2FR) position fillet welding of pipe.

5.20.2.2 Qualification in the 2G (horizontal) position qualifies for flat position and horizontal position groove welding of plate, flat position and horizontal position fillet welding of plate, horizontal rotated position groove welding of pipe, and inclined rotated (1F) position and horizontal rotated (2FR) position fillet welding of pipe.

5.20.2.3 Qualification in the 3G (vertical) position qualifies for flat position and vertical position groove welding of plate; flat position, horizontal position and vertical position fillet welding of plate; horizontal rotated position groove welding of pipe; and inclined rotated (1F) position and horizontal rotated (2FR) position fillet welding of pipe.

5.20.2.4 Qualification in the 4G (overhead) position qualifies for flat position and overhead position groove welding of plate; flat position, horizontal position and overhead position fillet welding of plate; horizontal rotated position groove welding of pipe; and inclined rotated (1 F) position and horizontal rotated (2FR) position fillet welding of pipe.

5.20.2.5 Qualification in both the 3G (vertical) and 4G (overhead) positions qualifies for all position groove welding of plate; all position fillet welding of plate; horizontal rotated position groove welding of pipe; and inclined rotated (1F) position and horizontal rotated (2FR) position fillet welding of pipe.

5.20.2.6 Qualification on a groove weld test plate in the 1G (flat) or 2G (horizontal) position shall also qualify for groove welding pipe with a backing in the same position qualified.

5.20.3 **Fillet Welds — Plate**

5.20.3.1 Qualification in the 1F (flat) position qualifies for flat position fillet welding of plate, and inclined rotated (1F) position fillet welding of pipe.

5.20.3.2 Qualification in the 2F (horizontal) position qualifies for flat position and horizontal position fillet welding of plate, and inclined rotated (1F) position and horizontal rotated position fillet welding of pipe.

5.20.3.2 Qualification in the 3F (vertical) position qualifies for flat position, horizontal position and vertical position fillet welding of plate, and inclined rotated (1F) position and horizontal rotated (2FR) position fillet welding of pipe.

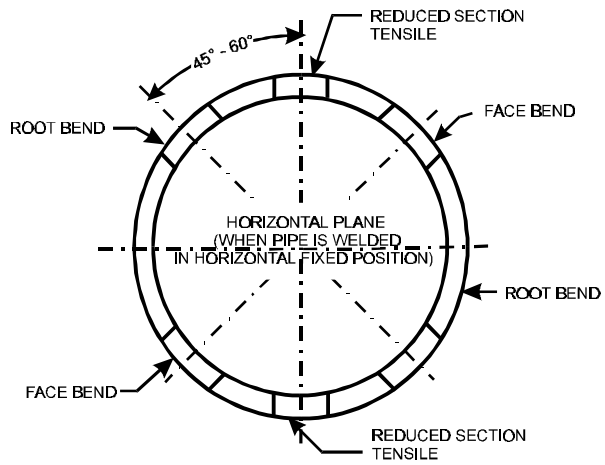

Figure 5.23 — Location of Test Specimens for Job Size Pipe or Tubing 1/16 in. through 3/8 in. Wall Thickness (see 5.17.4.3)

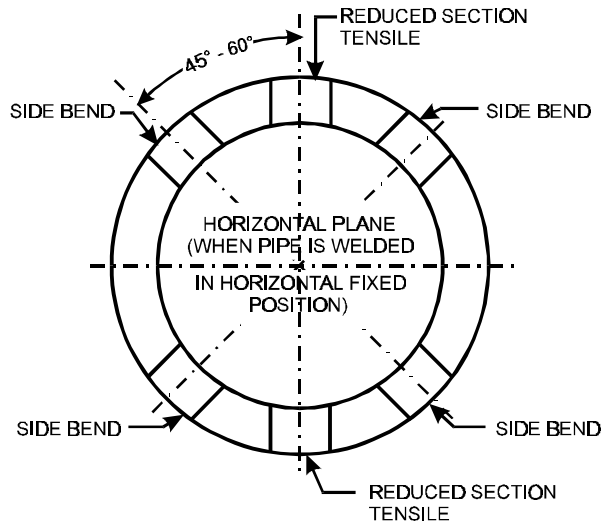

Figure 5.24 — Location of Test Specimens for Job Size Pipe or Tubing Over 3/8 in. Wall Thickness (see 5.17.4.3)

Table 5.5
Number and Type of Test Specimens and Range of Thickness Qualified — Procedure Qualification Fillet Welds (see 5.17.4.4)

Test Specimen	Fillet Size	Number of Welds per Procedure	Test Specimens Required: Macro-etch	Test Specimens Required: Fracture Test (see Figures 5.17, 5.18)	Test Specimens Required: Root Bend (see Figure 5.12)	Sizes Qualified: Plate Thickness	Sizes Qualified: Fillet Size
1. Tests on Plate							
Fillet Weld Test Option 1 (see Figure 5.17)	Single pass, max size to be used in construction	1 in each position to be used	2 faces	2	—	Unlimited	Max tested single pass and smaller
	Multiple pass, min size to be used in construction	1 in each position to be used	2 faces	2	—	Unlimited	Min tested multiple pass and larger
Fillet Weld Test Option 2 (see Figure 5.19)	Max size to be used in construction	1 in each position to be used	—	—	2	Unlimited	All
2. Tests on Pipe and Tubing							
Fillet Weld Test — Pipe Option 1 (see Figure 5.18)	Single pass, max size to be used in construction	1 in each position to be used	2	4 or more	—	Unlimited	Max tested single pass and smaller
	Multiple pass, min size to be used in construction	1 in each position to be used	2	4 or more	—	Unlimited	Min tested multiple pass and larger

Note All welded test specimens shall be visually inspected (see 5.8).

5.20.3.4 Qualification in the 4F (overhead) position qualifies for flat position, horizontal position, and overhead position fillet welding of plate, and inclined rotated (1F) position and horizontal rotated (2FR) position fillet welding of pipe.

5.20.3.5 Qualification in both the 3F (vertical) and 4F (overhead) positions qualifies for all position fillet welding of plate, and inclined rotated(1F) position and horizontal rotated (2FR) position fillet welding of pipe.

5.20.4 **Groove Welds — Pipe**

5.20.4.1 Qualification in the 1G (pipe axis horizontal, rotated) position qualifies for flat position groove welding of plate, flat position and horizontal position fillet welding of plate, horizontal rotated (1G) position groove welding of pipe, and inclined rotated (1F) position and horizontal rotated (2FR) position fillet welding of pipe.

5.20.4.2 Qualification in the 2G (pipe axis vertical, fixed) position qualifies for flat position and horizontal position groove welding of plate, flat position and horizontal position fillet welding of plate. horizontal rotated (1G) position arid vertical fixed (2G) position groove welding of pipe, and inclined rotated (1F) position, horizontal fixed (2F) position, and horizontal rotated (2FR) position fillet welding of pipe.

5.20.4.3 Qualification in the 5G (pipe axis horizontal, fixed) position qualifies for flat position, vertical position and overhead position groove welding of plate; all positions fillet welding of plate; horizontal rotated (1G) position and horizontal fixed (5G) position groove welding of pipe; and all position fillet welding of pipe.

5.20.4.4 Qualification in the 6G (pipe axis inclined, fixed) position qualifies for all position fillet welding of plate and pipe and all position groove welding of plate and pipe, except for T-, Y-, and K-connections.

5.20.4.5 Qualification in the 6GR (restricted, pipe axis inclined, fixed) position qualifies for groove welding of T-, Y-, and K-connections and groove and fillet welding of plate and pipe in all positions.

5.20.4.6 Qualification on the groove weld pipe test shall also qualify for groove welding square or rectangular tubes equal to or less than the thickness of the test pipe welded.

5.20.5 **Fillet Welds — Pipe**

5.20.5.1 Qualification in the 1F (pipe axis inclined, rotated) position qualifies for flat position fillet welding of plate and inclined rotated (1F) position fillet welding of pipe.

5.20.5.2 Qualification in the 2F (pipe axis vertical, fixed) position qualifies for flat position and horizontal position fillet welding of plate, and inclined rotated (1F) position, horizontal fixed (2F) position, and horizontal rotated (2FR) position fillet welding of pipe.

5.20.5.3 Qualification in the 2F (pipe axis horizontal, rotated) position qualifies for flat position and horizontal position fillet welding of plate, and inclined rotated (2F) position and horizontal rotated (2FR) position fillet welding of pipe.

5.20.5.4 Qualification in the 4F (pipe axis vertical, fixed) position qualifies for flat position, horizontal position, and overhead position fillet welding of plate; and inclined rotated (1F) position, horizontal fixed (2F) position, horizontal rotated (2FR) position, and overhead fixed (4F) position fillet welding of pipe.

5.20.5.5 Qualification in the 5F (pipe axis horizontal, fixed) position qualifies for all position fillet welding of plate, pipe, and tubing.

5.21 Preparation of Test Weldments — Performance Qualification

When performance qualification is done in accordance with a WPS that requires postweld heat treatment, the postweld heat treatment may be omitted. Each welder, welding operator, or tack welder who welds under the rules of this code shall have passed one or more tests as follows:

Table 5.6
Welder Performance Qualification—Type of Weld and Position Limitations (see 5.20.1)

Qualification Test		Type of Weld and Position of Welding Qualified			
		Plate		Pipe	
Weld	Plate or Pipe Positions*	Groove	Fillet	Groove	Fillet
Plate - groove	1G	1G	1F, 2F	1G	1F, 2FR
	2G	1G, 2G	1F, 2F	1G	1F, 2FR
	3G	1G, 3G	1F, 2F, 3F	1G	1F, 2FR
	4G	1G, 4G	1F, 2F, 4F	1G	1F, 2FR
	3G and 4G	All	All	1G	1F, 2FR
Plate - fillet	1F		1F		1F
	2F		1F, 2F		1F, 2FR
	3F		1F, 2F, 3F		1F, 2FR
	4F		1F, 2F, 4F		1F, 2FR
	3F and 4F		All		1F, 2FR
Pipe - groove	1G	1G	1F, 2F	1G	1F, 2FR
	2G	1G, 2G	1F, 2F	1G, 2G	1F, 2F, 2FR
	5G	1G, 2G, 4G	(Note 1)	1G, 5G	(Note 1)
	6G	(Note 1)	(Note 1)	(Note 1)	(Note 1)
	2G and 5G	(Note 1)	(Note 1)	(Note 1)	(Note 1)
	6GR	All	All	All	All
Pipe - fillet	1F		1F		1F
	2F		1F, 2F		1F, 2F, 2FR
	2FR		1F, 2F		1F, 2FR
	4F		1F, 2F, 4F		1F, 2F, 4F, 2FR
	5F		All		All

Notes
1. Qualifies all positions except for T-, Y-, and K-connections.
* See Figures 5.1, 5.2, 5.3, 5.4, 5.5, and 5.6.

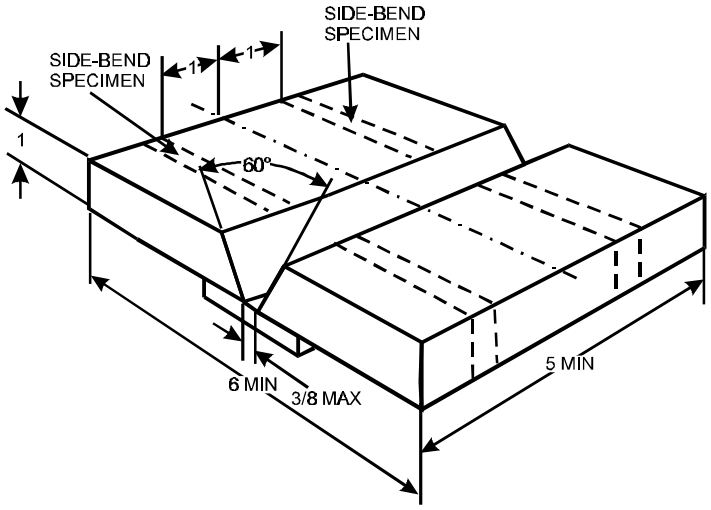

Note: When radiography is used for testing no tack welds shall be in the test area.

Figure 5.25 — Test Plate for Unlimited Thickness — Performance Qualification — Option 1 — All Positions (see 5.21.1)

5.21.1 **Groove Weld Qualification Test for Plate of Unlimited Thickness.** For qualification (Option 1) in any position, the joint detail shall be as follows: 1 in. plate, single V-groove, 60° included angle, 3/8 in. maximum root opening with backing (see Figure 5.25). For horizontal position qualification only (Option 2), the joint detail may, at the contractor's option, be as follows: single-bevel groove, 60° groove angle, 3/8 in. maximum root opening with backing (see Figure 5.26). Backing shall be at least 3/8 in. by 2 in. Minimum length of welding groove shall be 5 in.

5.21.2 **Groove Weld Plate Qualification Test for Plate of Limited Thickness.** For qualification (Option 1) in any position, the joint detail shall be as follows; 3/8 in. plate, single V-groove, 60° included angle, 3/8 in. maximum root opening with backing (see Figure 5.27). For horizontal position qualification only (Option 2). The joint detail may, at the contractor's option, be as follows; single-bevel groove, 60° groove angle, 3/8 in. maximum root opening with backing (see Figure 5.28). Backing shall be at least 3/8 in. by 2 in. Minimum length of welding groove shall be 5 in.

5.21.3 **Groove Weld Qualification Test for Pipe.** The joint detail shall be (1) that shown in the qualified welding procedure specification for a single-welded pipe groove weld, or (2) pipe diameter and wall thickness as required, single V-groove, 60° included angle, 1/16 in. maximum root face and root opening without backing strip (see Figure 5.29 or 5.30), or (3) single V-groove, 60° included angle and suitable root face and root opening with backing (see Figure 5.31).

5.21.4 **Groove Weld Qualification Test for T-, K-, or Y-Connections on Pipe or Tube.** The joint detail (see Figure 5.32) shall be as follows: single bevel, 60° minimum groove angle with bevel on pipe or tube at least ¼ in. in thickness; the square edge pipe or tube shall be at least 3/16 in. thicker than the beveled pipe; 1/16 in. maximum root face and 1/16 in. root opening. A restriction ring shall be placed on the thicker material, within ½ in. of the joint and shall extend at least 6 in. beyond the surface of the pipe.

5.21.5 **Fillet Weld Qualification Test for Plate and Pipe Only or Tack Welder Qualification.** For fillet weld qualification only: (1) for fillet welds between parts having a dihedral angle (Ψ) of 75° or less, the welder shall weld a groove weld test plate as required by 5.21.1 or 5.21.2, and (2) for joints having a dihedral angle (Ψ) greater than 75°. but not exceeding 135°, the welder shall prepare a weldment according to Option 1 or Option 2 depending on the contractor's choice, as follows:

5.21.5.1 **Option 1**. **Plate and Pipe —** Weld a fillet weld soundness test weldment in accordance with Figure 5.33.

5.21.5.2 **Option 2. Plate Only —** Weld a soundness test plate in accordance with Figure 5.19.

5.22 Limitation of Variables — Welder Performance Qualification

For the qualification of a welder, the following rules shall apply:

5.22.1 Qualification established with any one of the aluminum alloys permitted by this code shall be considered as qualification to weld or tack weld any of the other aluminum alloys with the process used in the qualification test.

5.22.2 A welder shall be qualified for each welding process used.

5.22.3 Qualification established with an approved filler metal and shielding gas combination shall be considered as qualification to weld or tack weld with any other approved filler metal with the shielding gas and the process used in the qualification test.

5.22.4 A change in the position in which welding is performed as defined in 5.6 and outside the limitations of Table 5.6 shall require requalification.

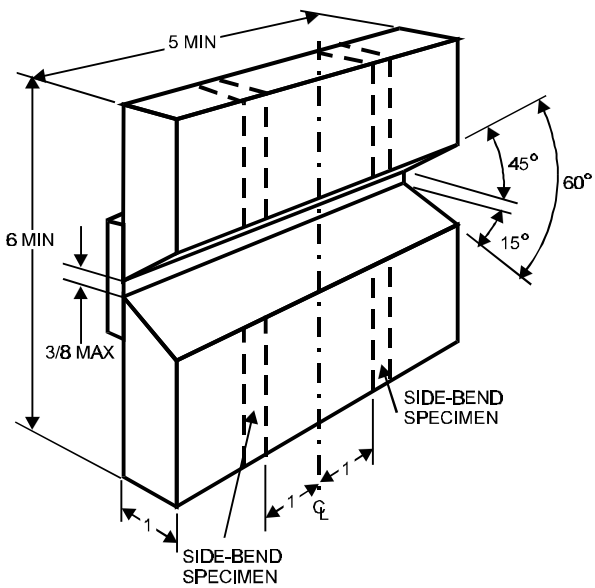

Note: When radiography is used for testing, no tack welds shall be in the test area.

Figure 5.26 — Test Plate for Unlimited Thickness — Option 2 — Horizontal Position Only (see 5.21.1)

5.22.5 A change from one diameter-wall pipe grouping shown in Table 5.7 to another shall require requalification.

5.22.6 When the plate is in the 3G or 3F vertical position, or the pipe is in the 5G, 6G or 6GR position, a change in the direction of vertical welding shall require requalification.

5.22.7 The omission of backing material in complete joint penetration welds welded from one side shall require requalification.

5.23 Limitation of Variables — Welding Operator Performance Qualification

For the qualification of a welding operator, the following rules shall apply:

5.23.1 Qualification established with any one of the aluminum alloys permitted by this Code shall be considered as qualification to weld any of the other aluminum alloys with the process used in the qualification test.

5.23.2 Qualification established with an approved filler metal and shielding gas combination shall be considered qualification to weld with any other approved filler metal and shielding gas combination with the process used in the qualification test.

5.23.3 A welding operator qualified to weld with multiple electrodes is considered qualified to weld with a single electrode, but not vice versa.

5.23.4 A change in the position in which welding is performed, as defined in 5.6, shall require requalification.

5.23.5 A welding operator shall be qualified for each process used.

5.24 Limitation of Variables — Tack Welder Performance Qualification

For the qualification of a tack welder, the following rules shall apply:

5.24.1 Qualification established with any one of the aluminum alloys permitted by this code shall be considered as qualification to tack weld any of the other aluminum alloys with the process used in the qualification test.

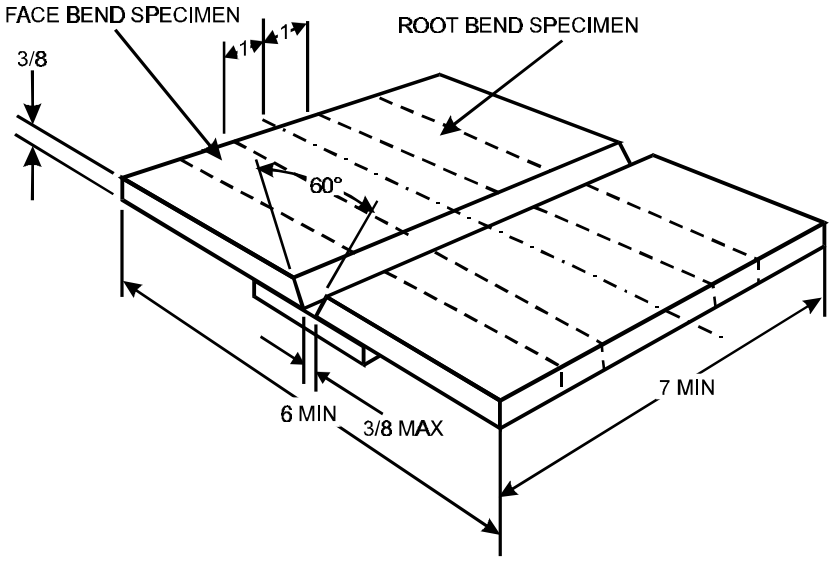

Note: When radiography is used for testing, no tack welds shall be in test area

Figure 5.27 — Test Plate for Limited Thickness — All Positions — Performance Qualification (see 5.21.2)

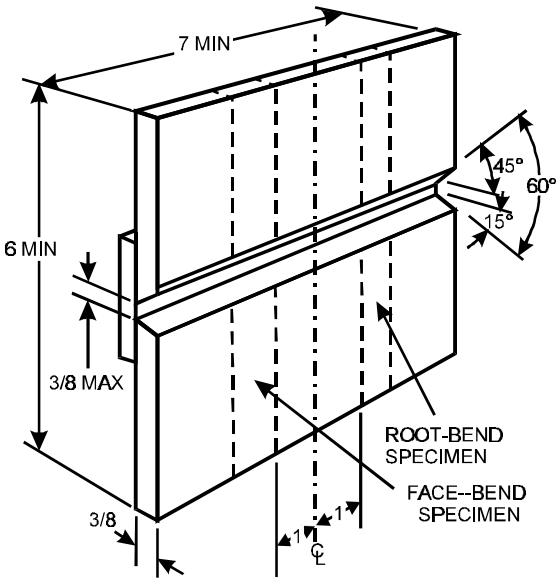

Note: When radiography is used for testing, no tack welds shall be in the test area

Figure 5.28 — Optional Test Plate for Limited Thickness — Horizontal Position — Performance Qualification (see 5.21)

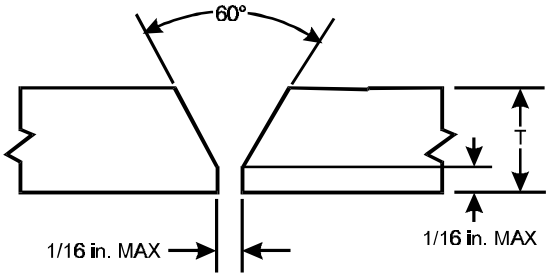

Figure 5.29 — Tubular Groove Weld — Performance Qualification — Without Backing (see 5.21.3)

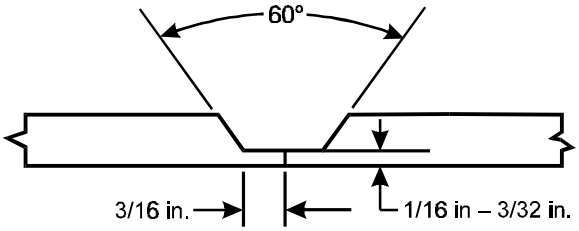

Figure 5.30 — Tubular Groove Weld — Performance Qualification — Without Backing (Alternative to Figure 5.29) (see 5.21.3)

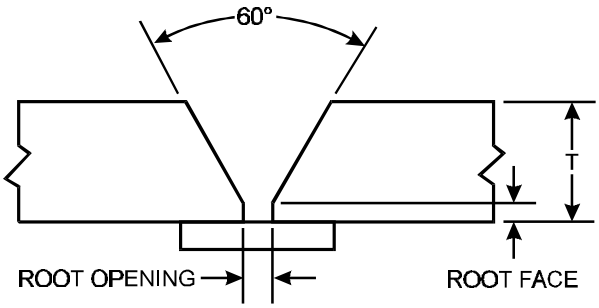

Figure 5.31 — Tubular Groove Weld — Performance Qualification With Backing (see 5.21.3)

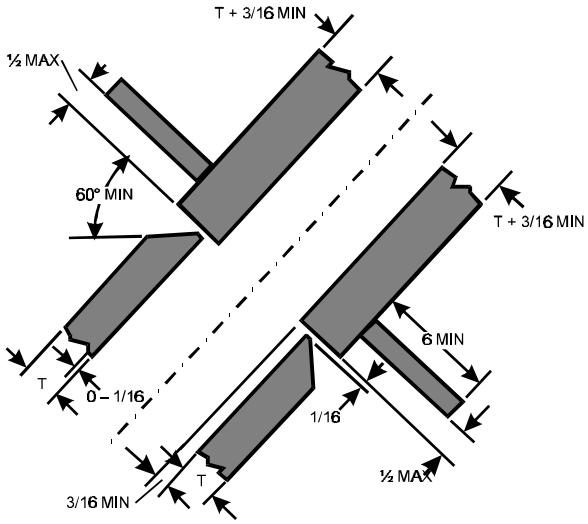

Figure 5.32 — Test Joint for T-, Y-, and K- connections on Pipe or Square or Rectangular Tubing — Performance Qualification (see 5.21.4)

5.24.2 Qualification as a tack welder shall qualify as a welder of fillet welds in the position qualified as defined in 5.3.

5.24.3 Qualification established with an approved filler metal and shielding gas combination shall be considered qualification to tack weld with any other approved filler metal and shielding gas combination for the process used in the qualification test.

5.24.4 A tack welder shall be qualified for each process used.

5.24.5 A change in the position in which tack welding is performed, as defined in 5.6, shall require requalification.

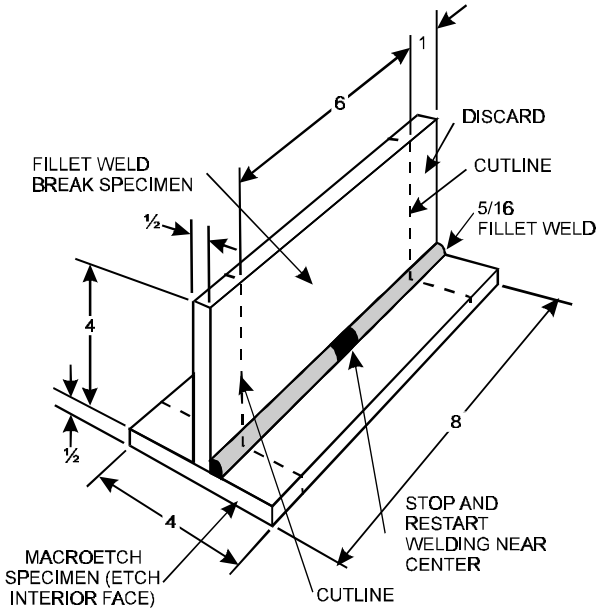

Figure 5.33 — Test Weldment for Fillet Welds Only — Performance Qualification — Option 1 (see 5.21.5.1)

5.25 Tests — Performance Qualification

5.25.1 **Required Tests -— Groove Welds**

(1) Visual examination for appearance and dimensions.

(2) Bend test for soundness and ductility (except castings), or radiographic examination.

(3) When welding a casting to other castings or wrought materials, the bend test for soundness and ductility of groove welds and fillet welds shall be omitted, and a macroetch test for soundness shall be conducted.

5.25.2 **Required Tests — Fillet Welds**

(1) Visual examination for appearance and dimensions and macroetch test

(2) Fracture test (Option 1) for soundness (see Figure 5.33), or root bend test (Option 2) for soundness (see Figure 5.19).

(3) Macroetch test for soundness of welded castings.

5.25.3 **Test Specimens: Number, Type, and Preparation.** The type and number of test specimens that shall be tested to qualify a welder, welding operator, or tack welder are shown in Table 5.7 together with the range of material thicknesses that are qualified for use in

construction in relation to the thickness of the test material used in making the qualification. Radiographic examination of the groove-weld test assembly may be used at the contractor's option in lieu of mechanical testing, see section 6, Part B for specific radiation angle, dimensions and macroetch test.

5.25.4 **Location of Test Specimens for Performance Qualification.** One sample weldment shall be made for the type of weld qualification being tested. Test size of the sample weldment and location of the test specimens to be removed shall be in accordance with the figures associated with the type of weldment being tested (see Figures 5.25 through 5.33). The removal of test specimens from pipe shall be as shown in Figure 5.34.

5.25.5 **Preparation of Test Specimens.** The test specimens shall be prepared in accordance with section 5, Part B.

5.25.6 **Test Procedures**

5.25.6.1 Bend tests shall be made as described in 5.10.2.

5.25.6.2 **Fillet Weld Fracture Test.** The entire length of the fillet weld shall be examined visually; then the 6 in. long specimen shall be tested as described in 5.25.2.

5.25.6.3 Radiographic test procedure shall be as described in section 6, Part B.

5.25.6.4 Macroetch test procedure is described in 5.8.1.2.

5.25.7 **Acceptance Criteria — Groove Welds**

5.25.7.1 Visual examination shall conform to 5.8.2.

5.25.7.2 Guided bend test results shall be within the limits of 5.10.3.

5.25.7.3 Radiographic evaluation shall be within the limits of 5.12.2. Two radiographs shall be taken, one perpendicular to the weld surface, and the second parallel to one side of the weld groove.

5.25.8 **Acceptance Criteria — Fillet Welds**

5.25.8.1 Visual examination shall conform to 5.8.3.

5.25.8.2 Fracture test results shall be within the limits of 5.11.3.1.

5.25.8.3 Fillet weld root bend test results shall be within the limits of 5.10.3.

5.26 Retests

5.26.1 The performance test may be terminated at any stage of the testing procedure, whenever it becomes apparent to the supervisor conducting the tests that the welder, welding operator, or tack welder does not have the required skill to produce satisfactory results.

5.26.2 In case a welder, welding operator or tack welder fails to meet the requirements of one or more weld tests, a retest may be allowed under the following conditions:

5.26.2.1 An immediate retest may be made consisting of two test specimens of each type on which the welder, welding operator, or tack welder failed. All retest specimens shall meet all the specified requirements.

5.26.2.2 A complete performance qualification retest may be made at a later date for any failed qualification tests provided, there is evidence that the welder, welding operator, or tack welder has had further training or practice.

5.27 Period of Effectiveness

The welder's, welding operator's, or tack welder's qualification, as specified in this code (Section 5,

Part D), shall be considered as remaining in effect indefinitely unless (1) the welder, welding operator, or tack welder is not engaged in a given process of welding for which the welder, welding operator, or tack welder is qualified for a period exceeding, six months, or (2) there is some specific reason to question the welder's, welding operator's, or tack welder's ability.

Footnotes

1. The provisions of ANSI/AWS B2.1, Standard for Welding Procedures and Performance Qualification, may be used for the qualification of procedures and personnel. However, in instances where the provisions of ANSI/AWS B2.1 and ANSI/AWS D1.2 are in conflict, ANSI/AWS D1.2 shall take precedence.
2. The term pipe as used herein shall include all tubular shapes.
3. The provisions of ANSI/AWS B4.0, Standard Methods for Mechanical Testing of Welds, may be used for the testing of welds made for procedure or performance qualification. However, in instances where the provisions of ANSI/AWS B4.0 and ANSI/AWS D1.2 are in conflict, ANSI/AWS D1.2 should take precedence.
4. Annealing practice: Hold 2 – 3 hours at 775°F and cool at 50° F/hr to 500°F. The rate of cooling below 500º F is unimportant.

Table 5.7

Number and Type of Test Specimens and Range of Thickness Qualified Welder and Welding Operator Qualification (see 5.25.3)

1. Test on Plate

Type of Weld	Thickness (T) of Test Plate as Welded, in.	Visual Inspection	Number of Specimens: Bend Tests* All Positions: Face	Root	Side	Fillet Weld Fracture	Macroetch Test	Plate Thickness Qualified, in.: Min	Max[3]
Groove	< 3/8	Yes	1	1	—	—	—	T	2T
Groove	3/8	Yes	1	1	—	—	—	1/8	2T
Groove	Over 3/8 and under 1	Yes	—	—	2	—	—	1/8	2T
Groove	1 or over	Yes	—	—	2	—	—	1/8, unlimited	
Fillet Option 1	1/2	Yes	—	—	—	1	1	Unlimited	
Fillet Option 2	3/8	Yes	—	2	—	—	—	Unlimited	

Notes: 1. See Figure 5.33
2. See Figure 5.19.
3. Also qualifies for welding fillet welds on material of unlimited thickness.
* Radiographic examination of the welder or welding operator test plate may be made in lieu of the bend test. (See 5.7.3)

2. Tests on Pipe or Tubing

Material Type	Pipe or Tube Size of Sample Weld: Nominal Pipe Size, in.	Wall, t, of Wrought, in.	Number of Sample Weld per Position	Visual Inspection	Test Specimens Required: Macro-etch Test	Root Bend (see Figure 5.12)	Face Bend (see Figure 5.12)	Pipe or Tubing Diameter Qualified: Min in.	Max in.	Wall Thickness Qualified: Min in.	Max in.
Wrought to Wrought	6 through 8	1/8 – 3/8	1	Yes	—	2	2	3/4	16	1/8	3/8
Cast to Wrought or Cast to Cast	3 through 5	1/16	1	Yes	2	—	—	2	16	1/8	1/2

3. Tests on Pipe

Type of Weld	Pipe or Tubing Size as Welded: Nominal Pipe size	Wall Thickness	Visual Inspect'n	Number of Specimens: All Positions Except 5G and 6G: Face Bend	Root Bend	Side Bend	5G and 6G Positions Only: Face Bend	Root Bend	Side Bend	Pipe Tube or size Qualified in.	Pipe or Tube Wall Thickness Qualified, in.: Min	Max
Groove	2 in. or 3 in.	Sch. 80 Sch. 40	Yes	1	1	—	2	2	—	4 or smaller	0.063	0.674
Groove	6 in. or 8 in.	Sch. 120 Sch. 80	Yes	—	—	2	—	—	4	Larger than 4	0.187	Unlimited
Groove	See Figure 5.32		Yes	—	—	—	—	—	4	All	Unlimited	

4. Tests on Job Size Pipe or Tubing

Type of Weld	Pipe or Tubing Size as Welded: Nominal Pipe size	Wall Thickness T	Visual Inspection	Number of Specimens: All Positions Except 5G and 6G: Face Bend	Root Bend	Side Bend	5G and 6G Positions Only: Face Bend	Root Bend	Side Bend	Pipe or Tube size Qualified in.	Pipe or Tube Wall Thickness Qualified, in.: Min	Max[1]
Groove	≤ 4 in.	Any	Yes	1	1	—	2	2	—	4 or smaller	0.063[1]	0.674[1]
Groove	> 4 in.	Any	Yes	—	—	2	—	—	4	1/2 test diam. or 4 min[3] through unlimited (for max. size qualified)	0.187	Unlimited
Fillet Option 1	2 in or 3 in.	Sch. 120 Sch. 40	Yes	Fillet Weld Fracture Test: 2			Macroetch Test: 2			All	Unlimited[1]	

Note: Radiographic examination of the welder or welding operator test pipe may be made in lieu of the bend test. (See 5.7.3)
1 Also qualifies for welding fillet welds on material of unlimited thickness.
2 If T < 0.063 minimum wall thickness qualified shall be T and maximum qualified shall be 2T.
3. Minimum pipe size qualified shall not be less than 4 in. or d/2 whichever is greater where d is diameter of test pipe.

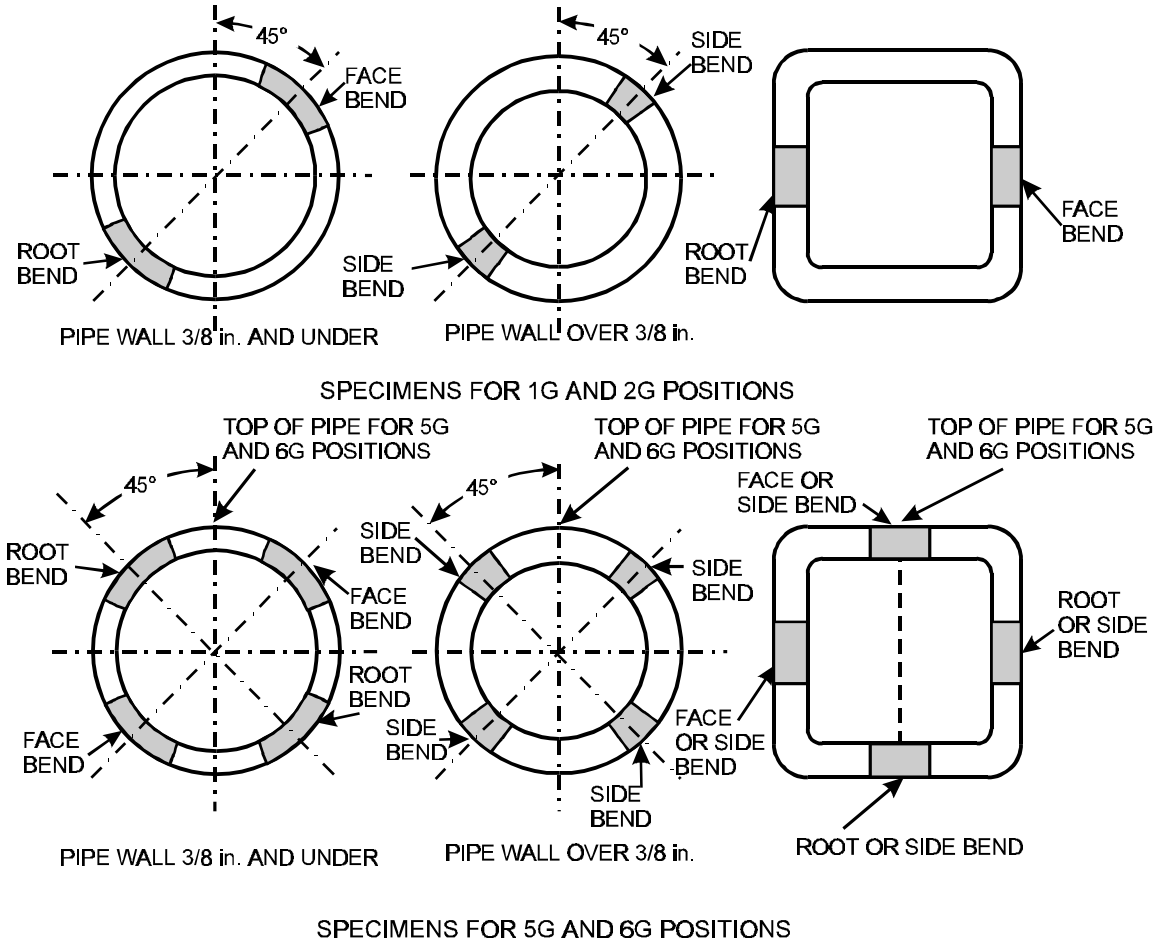

Figure 5.34 — Location of Test Specimens on Welded Test Pipe and Square and Rectangular Tubing — Performance Qualification (see 5.25.4)

6. Inspection

Part A

General Requirements

6.1 General

6.1.1 For the purpose of this Code, fabrication verification and testing and confirmation and testing are separate functions. Fabrication verification and testing may be performed as necessary prior to assembly, during assembly, during welding, and after welding to ensure that material and workmanship meet the requirements of the contract document. Confirmation inspection and testing shall be performed in a timely manner to avoid delays in the work. Fabrication verification and testing shall be the responsibility of the manufacturer, unless otherwise provided in the contract documents. Confirmation inspection and testing may be performed at the prerogative of the contracting agency.

6.1.2 The fabrication verification and testing individual is one who performs verification and testing in regard to product quality on behalf of the manufacturer within the scope of the contract document. The confirmation individual acts on behalf of the contracting agency on all quality matters within the scope of the contract document.

When the term Inspector(s) is used in this Code without further qualification, it applies equally to the individual performing fabrication verification and confirmation within the limits of 6.1.1.

6.1.3 **Inspector Qualification**

6.1.3.1 Inspectors responsible for acceptance or rejection of material and workmanship shall be qualified. The basis of Inspector qualification shall be documented.

The following are acceptable qualification bases:

(1) Current or previous certification as an AWS Certified Welding Inspector (CWI) in accordance with the provisions of AWS QCI, Standard and Guide for Qualification and Certification of Welding Inspectors, or

(2) Current or previous qualification by the Canadian Welding Bureau (CWB) to the requirements of the Canadian Standard Association (CSA) Standard W178.2, Certification of Welding Inspectors, or

(3) An Engineer, technician or operator who, by training and experience, in metals fabrication, inspection, and testing, is competent to perform inspection of the work, as described in this document.

6.1.3.2 The qualification of an Inspector shall remain in effect indefinitely, provided the Inspector remains active in inspection of welded aluminum fabrication, unless there is specific reason to question the Inspector's ability.

6.1.3.4 Inspectors shall have passed an eye examination with or without corrective lenses to prove: (1) near vision acuity of Snellen English, or equivalent, at no less than12 in., and (2) far vision acuity of 20/40, or better. An eye examination of all inspection personnel is required every three years or less, if necessary, to demonstrate adequacy.

6.1.3.5 Weld Engineering and/or Quality Engineering shall have authority to verify the qualification of Inspectors.

6.1.4 The Inspector shall ascertain that all fabrication and erection by welding is performed in accordance with the requirements of the contract documents.

6.1.5 The Inspector shall be furnished complete, detailed weld drawings showing the size, length, type, and location as well as all needed inspection documents.

6.1.6 The Inspector shall be notified of operations subject to inspection and verification.

6.2 Inspection of Materials

The Inspector shall make certain that only materials conforming to the requirements of this Code are used.

6.3 Inspection of Welding Procedure Qualification and Equipment

6.3.1 The Inspector shall make certain that all welding is in accordance with a welding procedure specification which has been qualified in accordance with 5.2 of this Code.

6.3.2 The Inspector shall assure that the welding equipment to be used conforms to the requirements of 3.1.2.

6.4 Inspection of Welder, Welding Operator, and Tack Welder Qualifications

6.4.1 The contractor shall permit welding to be performed only by welders, welding operators, and tack welders who are qualified in accordance with the requirements of 5.3.

6.4.2 When the quality of a welder's, welding operator's, or tack welder's work appears to be below the requirements of this Code, the Inspector shall determine the cause and may require that the welder, welding operator, or tack welder demonstrate an ability to produce sound welds by means of a simple test, such as the fillet weld break test or by requiring complete requalification in accordance with section 5, Part D.

6.4.3 The Inspector shall require requalification of any welder, welding operator, or tack welder who has not used each process to be used in the construction under consideration for a period exceeding six months.

6.5 Inspection of Work and Records

6.5.1 As part of the visual inspection, the Inspector shall make certain that the size, length, and location of all welds conform to the requirements of this Code, and to the detail drawings, and that no unspecified welds have been added without approval.

6.5.2 The Inspector shall make certain that only welding procedures which meet the provisions of 5.1 and 5.2 are employed.

6.5.3 The Inspector shall, observe the technique and performance of each welder, welding operator, and tack welder to make certain that the applicable requirements of section 4 are met.

6.5.4 The Inspector shall examine the work to make certain that it meets the requirements of section 3 and subsections 8.7, 9.7, or 10.8, as applicable. The size and contour of welds shall be measured with acceptable gages. Visual inspection for cracks in welds and base metal and other discontinuities should be aided by a strong light, magnifiers, or such other devices as may be found helpful.

6.5.5 The Inspector shall identify with a distinguishing mark all parts or joints that have been inspected and rejected.

6.5.6 The Contractor or manufacturer shall keep a record of qualifications of all welders, welding operators, and tack welders, all procedure qualifications or other tests that are made, and such other information as may be pertinent.

6.6 Obligations of the Contractor

6.6.1 In addition to the requirements of 6.1.1, the contractor shall be responsible for visual inspection and necessary correction of all deficiencies in materials and workmanship in accordance with the requirements of section 3 and subsection 8.7.1, 9.7.1, or 10.8.1, as applicable.

6.6.2 The contractor shall comply with all requests of the Inspector to correct deficiencies in materials and workmanship as provided in the contract documents.

6.6.3 If faulty welding or its removal for rewelding damages the base metal so that in the judgment of the MRB its retention is not in accordance with the intent of the contract documents, the contractor shall remove and replace the damaged base metal in a manner approved by the MRB.

6.6.4 When nondestructive testing other than visual inspection is specified in the information furnished to bidders, it shall be the contractor's responsibility to ensure that all specified welds meet the quality requirements of 8.7, 9.7, or 10.8, whichever is applicable.

6.7 Nondestructive Testing

6.7.1 When nondestructive testing other than visual is to be required, it shall be so stated in the procurement documentation. This information shall designate the categories of welds to be examined, the extent of examination of each category, and the method or methods of testing.

6.7.2 Welds tested nondestructively that do not meet the requirements of this Code shall be repaired by the methods permitted in 3.6.

6.7.3 When radiographic testing is used, the procedure and technique shall be in accordance with Part B of this section.

6.7.4 When ultrasonic testing is used, the procedure and technique shall be in accordance with Part C of this section.

6.7.5 For detecting discontinuities that are open to the surface, liquid penetrant inspection may be used. The methods set forth in ASTM E165, *Standard Recommended Practice for Liquid Penetrant Inspection Method,* shall be used and

the standards of acceptance shall be in accordance with 8.7.1, 9.7.1, or 10.8.1, whichever is applicable.

6.7.6 **Personnel Qualification**

6.7.6.1 Personnel performing nondestructive testing other than visual shall be qualified in accordance with the current edition of the American Society for Nondestructive Testing Recommended Practice No. SNT-TC-1A[1]. Only individuals a) qualified as an NDT Level II or Level III, or b) qualified as an NDT Level I and working under a qualified NDT Level II or Level III may perform nondestructive testing unless otherwise specified.

6.7.6.2 Certification of Level I and Level II individuals shall be performed by a Level III individual who has been certified by (1) The American Society for Nondestructive Testing, or (2) has the education, training, experience, and has successfully passed the written examination prescribed in SNT-TC-1A

6.7.6.3 Personnel performing nondestructive tests under the provisions of 6.7.6 need not be qualified nor certified under the provisions of AWS QCI.

Part B

Radiographic Inspection

6.8 General

6.8.1 The procedures and standards set forth herein govern radiographic testing of welds when such inspection is required by the contract documents as provided in 6.7. The requirements listed herein are specifically for testing welds in plates, shapes, and bars by X-ray or gamma-ray sources. The methodology shall conform to ASTM

E94, *Standard Recommended Practice for Radiographic Testing,* and ASTM E142, *Standard Method for Controlling Quality of Radiographic Testing,* except as provided herein.

6.8.2 Variations in testing procedures, equipment, and acceptance standards shall be used upon agreement between the contractor and the Government. Such variations include, but are not limited to, the following: radiographic testing of fillet, T, and corner welds; changes in source-to-film distance; unusual application of film; unusual penetrameter applications (including film side penetrameters and wire penetrameters); radiographic testing of thicknesses greater than 6 in.; film types, densities, and variations in exposure, development, and view techniques.

6.9 Extent of Testing

The extent of radiographic testing shall be as specified in the technical data package. Sampling plans shall be submitted to the procuring activity for approval.

6.10 Radiographic Procedures

6.10.1 Radiographs shall be made using a single source of either X-ray or gamma radiation. The radiographic sensitivity shall be judged on the basis of the penetrameter images. The radiographic technique and equipment shall provide sufficient sensitivity to clearly delineate the required penetrameters and the essential holes as described in 6.10.7, Table 6.1 and Figure 6.3. Identifying letters and numbers shall show clearly in the radiograph.

6.10.2 Radiography shall be performed in accordance with all applicable safety requirements.

6.10.3 When the technical data package requires the removal of weld reinforcement, the welds shall be prepared for radiography by grinding as described in 3.5. Other weld surfaces need not be ground or otherwise smoothed for purposes of radiographic testing unless surface irregularities between the weld and base metal obscure objectionable weld discontinuities.

6.10.3.1 Extension bars and run off plates shall be removed prior to radiographic inspection unless otherwise approved by the Weld or Quality Engineer.

6.10.3.2 When required by the technical data package, backing shall be removed and the surface shall be finished flush by mechanical means prior to radiography. Weld finishing shall be as described in 3.5.

6.10.3.2 When weld reinforcement or backing, or both are not removed, aluminum shims which extend at least 1/8 in. beyond three sides of the required penetrameter shall be placed under the penetrameter so that the total thickness of aluminum between the penetrameter and the film

Table 6.1

Penetrameter Requirements (see 6.10.1)

Nominal Material Thickness Range (in.)	Penetrameter Identification	Penetrameter Thickness, in.	Essential Hole
Up to 0.25 incl.	10	0.010	4T
Over 0.25 to 0.375	12	0.012	4T
Over 0.375 to 0.50	15	0.015	4T
Over 0.50 to 0.625	15	0.015	4T
Over 0.625 to 0.75	17	0.017	4T
Over 0.75 to 0.875	20	0.020	4T
Over 0.875 to 1.00	20	0.020	4T
Over 1.00 to 1.25	25	0.025	4T
Over 1.25 to 1.50	30	0.030	2T
Over 1.5 to 2.00	35	0.035	2T
Over 2.00 to 2.50	40	0.040	2T
Over 2.50 to 3.00	45	0.045	2T
Over 3.00 to 4.00	50	0.050	2T
Over 4.00 to 6.00	60	0.060	2T

is approximately equal to the average thickness of the weld measured through its reinforcement and backing.

6.10.4 As described in Appendix A of ASTM E94, radiographic film shall be Type 1 or Type 2, and lead foil screens shall be used as needed. Fluorescent screens shall not be permitted, unless specified by contract documents.

6.10.5 Radiographs shall be made with a single source of radiation centered as near as practicable with respect to the length and width of that portion of the weld being examined, and shall conform to the locations specified on the appropriate radiographic inspection drawing of the technical data package.

6.10.5.1 Gamma ray sources, regardless of size, shall be capable of meeting the geometric unsharpness requirement of Article 2, Section V of *ASME Boiler and Pressure Vessel Code.*

6.10.5.2 The source-to-subject distance shall not be less than the total length of film being exposed in a single plane. This provision does not apply to panoramic exposures made under the provisions of 6.10.8.2.

6.10.5.3 The source-to-subject distance shall not be less than seven times the thickness of the weld plus reinforcement and backing, if any, nor shall the inspecting radiation penetrate any portion of the weld represented in the radiograph at an angle greater than 26.5° from a line normal to the weld surface.

6.10.6 X-ray units may be used as a source for all radiographic inspection, provided they have adequate penetrating ability. Maximum permissible voltage depends on material thickness, as shown by ASME Section V, Article 2.

6.10.7 For joints of approximately uniform thickness, a single penetrameter shall show clearly on each radiograph, as shown in Figure 6.1.

When a transition in thickness occurs at a welded joint, each film shall clearly show one penetrameter on the thinner plate and one penetrameter on the thicker plate, as shown in Figure 6.2. Penetrameters shall be placed on the source side, parallel to the weld joint, with the essential holes at the outer end as detailed in Figures 6.1 and 6.2.

6.10.7.1 The thickness of the penetrameter and the essential hole diameter shall be as specified in Table 6.1, except that a smaller essential hole or a thinner penetrameter, or both, may be selected by the contractor, provided all other provisions for radiography are met.

The thickness of the weldment shall be measured as T1 or T2, or both, at the locations shown in Figures 6.1 or 6.2, and may be increased to provide for the thickness of allowable weld reinforcement, provided shims are used as specified in 6.10.3.2. Aluminum backing shall not be considered part of the weld or reinforcement in the penetrameter selection. The penetrameter representative of the maximum weld thickness may be placed on either the sloping surface within 1 in. of the fusion line, or on a shim of suitable thickness on thinner side. On steeper slopes,

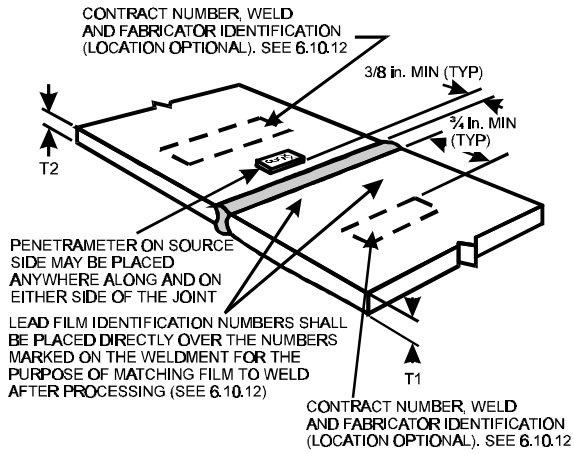

Figure 6.1 — Radiographic Identification and Penetrameter Locations on Approximately Equal Thickness Joints (see 6.10.7)

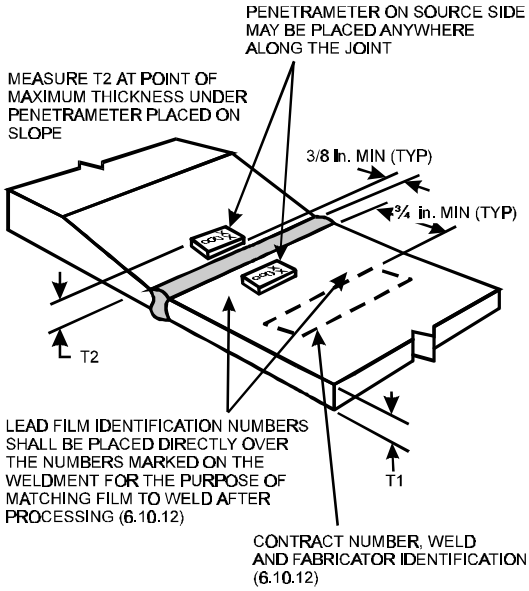

Figure 6.2 — Radiographic Identification and Locations on Transitions Joints (see 6.10.7)

tilting of the penetrameter may obscure the images of the holes.

6.10.7.2 Penetrameters for aluminum shall be manufactured from a radiographically similar aluminum alloy and shall conform to dimensions shown in Figure 6.3. For more detailed information, ASTM E142 should be consulted.

Each penetrameter shall be manufactured with three holes, one of which shall be of a diameter equal to twice the penetrameter thickness (2T). The diameter of the two remaining holes shall be selected by the manufacturer. Penetrameter designations 10 through 25, shall contain a 4T hole.

6.10.8 Welded joints shall be radiographed and the film indexed by methods that will provide complete and continuous inspection of the joint within the limits specified to be examined. Joint limits shall show clearly in the radiographs. Short film, short screens (when required by the radiographic procedure), excessive undercut by scattered radiation, or any other process that obscures portions of the total weld length shall render the radiograph unacceptable.

6.10.8.1 Except for spot radiography, films shall have sufficient length and shall be placed to produce at least ½ in. of film, exposed to direct radiation from the source, beyond each free edge where the weld is terminated.

6.10.8.2 To check for backscattered radiation, a lead symbol "B", ½ in. high, 1/16 in. thick shall be attached to the back of each film cassette. If the "B" image appears on the radiograph, the radiograph shall be unacceptable.

6.10.9 Film widths shall be sufficient to depict all portions of the welded joint, including the heat-affected zones, and shall provide sufficient additional space for the required penetrameters and film identification. The penetrameter shall be placed at leas 1/8 in., but not more than ¼ in. From the weld edge, whenever possible.

6.10.10 **Quality of Radiographs.** All radiographs shall be free from mechanical, chemical, or other blemishes to the extent that they might mask or be confused with the image of any discontinuity in the area of interest in the radiograph. Such blemishes include, but are not limited to the following:

(1) fogging.

(2) processing defects such as streaks, water marks, or chemical stains.

(3) scratches, finger marks, crimps, dirt, static marks, smudges, or tears.

(4) loss of detail due to poor screen-to-film contact.

(5) false indications due to defective screens or internal faults.

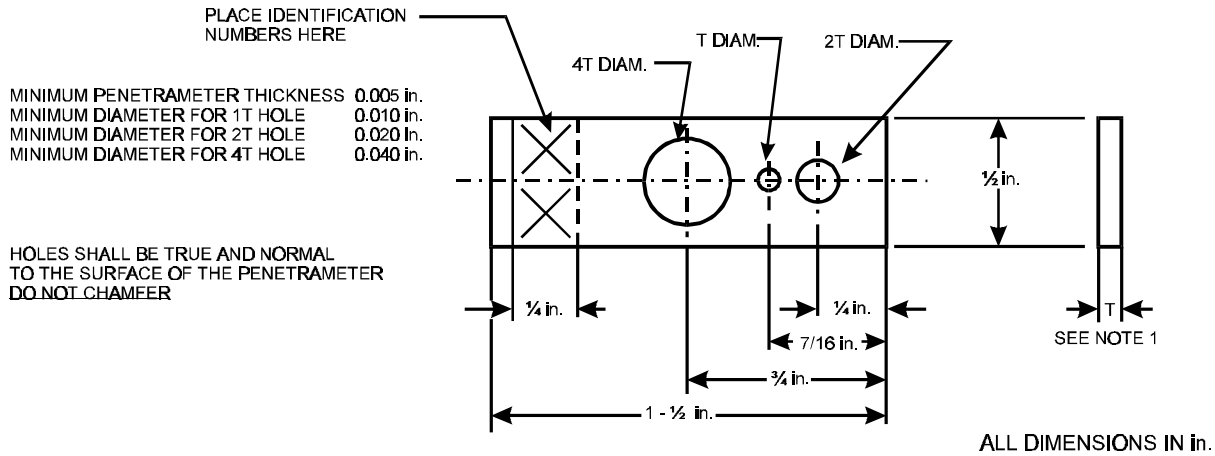

DESIGN FOR PENETRAMETER THICKNESS FROM 0.005 in. AND INCLUDING 0.050 in.:
FROM 0.005 in. THROUGH 0.023 in. SEE ASTM E142, TABLE 1
OVER 0.012 in. THROUGH 0.020 in., MADE IN 0.0025 in. INCREMENTS
OVER 0.020 in. THROUGH 0.050 in., MADE IN 0.005 in INCREMENTS
PENETRAMETER THICKNESSES BETWEEN THE INCREMENTS INDICATED ARE PERMITTED PROVIDED THEY DO NOT EXCEED THE MAXIMUM THICKNESS REQUIRED.

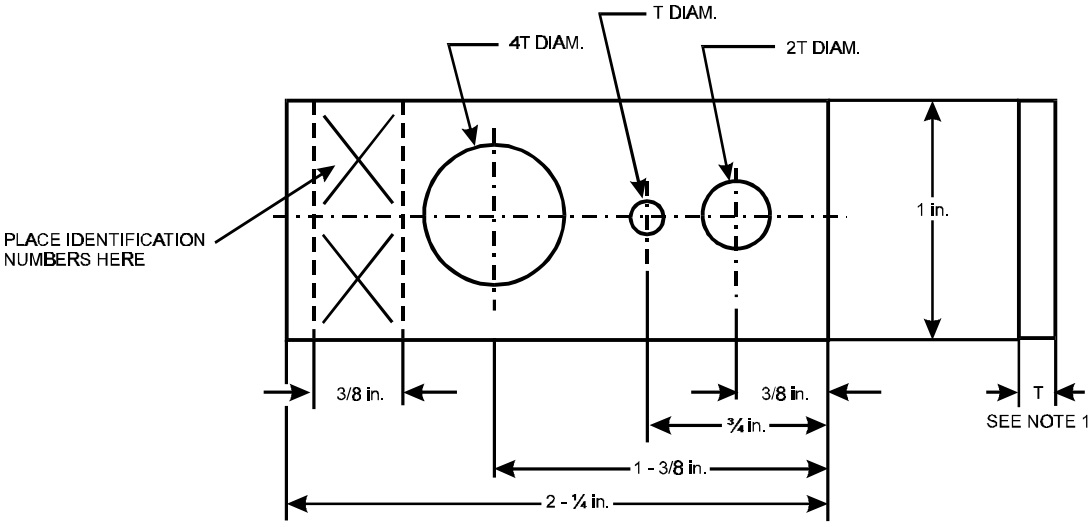

DESIGN FOR PENETRAMETER THICKNESS FROM 0.060 in. to 0.160 in. INCLUSIVE
MADE IN 0.010 in. INCREMENTS

Notes:
1. Tolerances on penetrameter thickness and hole diameter shall be ± 10% or one half of the thickness increment between parameter sizes, whichever is smaller.
2. For the Essential Hole — see Table 6.1.

Figure 6.3 — Penetrameter Design (see 6.10.7)

6.10.11 **Density Limitations**. The transmitted film density through the radiographic image of the body of the required penetrameter(s) and the area of interest shall be 1.8 minimum (preferably in the range from 2.5 to 3.5) for single film viewing for radiographs made with an X-ray source and 2.0 minimum for radiographs made with a gamma-ray source. For composite viewing of double film exposures, the minimum density shall be 2.0. The maximum density shall be 4.0 for either single or composite viewing.

The film shall be processed to develop a film blackening measured by the H&D radiographic density expressed as:

D = H&D (radiographic)density = $\log_{10} (I_0/I)$ where

I_0 = light intensity on the film, and
I = light transmitted through the film

6.10.12 Radiograph identification and location identification marks shall be placed on the weldment at each radiograph location, all of which shall show in the radiograph. The radiographic images shall be produced by placing lead numbers or letters, or any combination thereof, over each of the identical identification and location marks made on the weldment. The images provide the means for matching the developed radiograph with the weld.

Additional identification information may be preprinted no less than ¾ in. from the edge of the weld or produced on the radiograph by placing lead figures on the weldment.

Information required to show on the radiograph shall include the contract identification, initial of the radiographic inspection company, initials of the fabricator, the fabricator shop order number, the radiographic identification mark, the date, and the weld repair number, if applicable.

6.11 Acceptability of Welds

Welds shown by radiographic testing to have discontinuities prohibited by 9.7.2 or 10.8.2 shall be discarded or corrected in accordance with 3.6. More dense inclusions shall be treated as porosity.

6.12 Examination, Report, and Disposition of Radiographs

6.12.1 The contractor or manufacturer shall maintain a record of the welds or portions of welds subjected to radiographic inspection and include descriptions, pictures, or sketches of the discontinuity indications developed.

6.12.2 The contractor shall provide a variable intensity illuminator (viewer) with spot-review or masked spot-review capability. The viewer shall incorporate a means for adjusting the size of the spot under examination. The viewer shall have sufficient capacity to properly illuminate radiographs with an H&D density of 4.0. Film review shall be done in an area of subdued light.

6.12.3 Before a weld subject to radiographic testing by the manufacturer is accepted by the contractor, all of its radiographs, including any that show unacceptable quality prior to repair, and a report interpreting them, shall be submitted to the contractor upon request.

6.12.4 The contractor's or manufacturer’s obligation to retain radiographs shall cease after 1 year after completion of the contract unless otherwise specified.

Part C

Ultrasonic Testing of Groove Welds

6.13 General

6.13.1 When ultrasonic testing is required or permitted by the Contract Documents, the extent of testing, the procedure, and the acceptance criteria shall be specified therein.

6.13.2 The tester shall maintain a record of the welds or portions of welds subjected to ultrasonic testing. The contractor's obligation to retain these records shall cease after 5 years after completion of the contract unless otherwise specified.

Footnotes:

1. Available from the American Society for Nondestructive Testing, 4153 Arlingate Plaza, Columbus, Ohio 43228.

7. Stud Welding

Part A

General Requirements

7.1 General

7.1.1 Section 7 contains general requirements for arc stud welding and capacitor discharge stud welding of aluminum alloy studs to aluminum alloys and stipulates specific requirements for the following:

(1) mechanical properties of aluminum alloy studs

(2) workmanship, preproduction testing, qualification, and performance testing

(3) inspection of stud welding during production.

7.1.2 Wherever the term “contractor” is used it means “contractor or supplier subject to contractor’s approval.”

7.1.3 In all drawings subsequent to this code, the weld shall be noted on the technical data package as follows: “Weld in accordance with UDLP/TACOM Ground Combat Vehicle Welding Code -- Aluminum, Section 7.”

Part B

Arc Stud Welding

7.2 General Requirements

7.2.1 Studs shall be ¼ in. up to and including ½ in. diameter and designed for arc welding to aluminum members with the use of automatically timed stud welding equipment. The type, size, and lengths of the stud shall be as specified by the drawings, specifications or special provisions.

7.2.2 A ferrule or arc shield of heat resistant ceramic or other suitable material shall be furnished with each stud.

7.2.3 The minimum base metal thickness for arc stud application shall not be less than 50% of the stud diameter.

7.3 Material Requirements

7.3.1 Studs shall be made from cold drawn or extruded stock of alloys shown below. Other alloys may be used when specified in the technical data package.

Aluminum Alloys For Arc Stud Welding Applications
4043
5183
5356
5556

7.3.2 The stud shall not be anodized, painted, or coated with any foreign substance.

7.3.3 The contractor or manufacturer shall have a method of verification (purchase order, packing slip, etc.) that provides evidence that studs conform to 7.3

7.3.4 Mechanical testing of aluminum stud alloys shall be in accordance with the applicable sections of ASTM B557, *Standard Methods of Tension Testing Wrought and Cast Aluminum- and Aluminum-Alloys and Magnesium-Alloy Products* or AWS B4.0, *Standard Methods for Mechanical Testing of Welds.*

7.4 Workmanship

7.4.1 Studs shall be free from oil, moisture, excessive oxide, or other deleterious matter that would adversely affect the welding operation.

7.4.2 Base metal to which studs are to be welded shall be free of anodic coatings, moisture, or other injurious material to assure obtaining sound welds. These areas may be cleaned by etching, brushing with a stainless steel bristle brush, scraping, or grinding.

7.4.3 Ferrules shall be clean and dry. Any ferrules which show signs of surface moisture shall be oven dried at 250°F for a minimum of two hours before use.

7.4.4 Ferrule geometry shall conform to the contour of the base metal.

7.4.5 Ferrules shall be broken free from all studs after welding.

7.4.6 Welded studs shall meet the visual inspection requirements of 7.8.

7.5 Technique

7.5.1 Studs shall be welded with automatically timed stud welding equipment connected to a source of direct current (electrode positive) power. Welding current, time, shielding gas, and settings for lift and plunge should be set at optimum settings, based on past practice and recommendations of stud and equipment manufacturers (see exception noted in 7.5.4).

7.5.2 Welding grade shielding gas (argon, helium, or helium/argon mixtures) shall be used.

7.5.3 If two or more arc stud welding guns are to be operated from the same power source, they shall be interlocked so only one gun can operate at a time, and so the power source can fully recover from making one weld before another weld is started.

7.5.4 At the option of the contractor, aluminum studs may be applied by fillet welding by using the GMAW or GTAW process described in section 4, provided the following conditions are met.

7.5.4.1 The welding procedure used is qualified in accordance with section 5, Qualification of Procedures and Personnel.

7.5.4.2 The welder is qualified in accordance with section 5, Qualification of Procedures and Personnel.

7.5.4.3 The minimum fillet size to be used shall be as shown in Table 7.1.

7.5.4.4 The stud base shall be shaped to fit firmly against the part to which it is to be attached.

7.5.4.5 Fillet welded studs shall be visually inspected as set forth below, and in 8.7.1 (3) and (4):

(1) The weld has no cracks.

(2) Thorough fusion exists between weld metal and base metal.

Table 7.1

Minimum Fillet Weld Size for Small Diameter Studs (see 7.5.4.3)

Stud Diameter (d) in.	Minimum Fillet Weld Size in.
1/4 < d ≤ 3/8	3/16
3/8 < d ≤ 1/2	1/4

7.6 Qualification Requirements

7.6.1 **General**. Prior to shop or field application stud welding, procedures shall be prepared and qualified according to the requirements of 7.6. The results of these tests shall be recorded on a stud welding procedure qualification record (PQR).

7.6.2 **Responsibility for Tests.** The contractor shall be responsible for the preparation and qualification of stud welding procedures. The Government should accept properly documented evidence of previous qualification of the stud welding procedures to be employed.

7.6.3 **Welding Procedure Qualification**

7.6.3.1 **Preparation of Stud Welding Procedures.** Stud welding procedures shall be established in accordance with the limitation of variables except that a procedure established for each of two thicknesses of base metal using the same machine settings and conditions specified in the procedure qualification record may be used for all intermediate thicknesses. A suggested PQR form is shown in the Appendix.

7.6.3.2 **Welding Position.** Qualification in one position qualifies for all positions, except optional methods, GMAW or GTAW processes, which must be in accordance with 5.16.

7.6.4 **Limitation of Variables.** Any of the following changes shall require requalification of the stud welding procedure:

(1) A change in the base metal M-number

(2) A change in the F-number of the stud alloy

(3) A change in the nominal size or shape of the stud base

(4) A change of more than ±25% in the base metal thickness or thickness range qualified

(5) A change from a single shielding gas to any other gas, or to a mixture of gases, or a change of 10% or more in the specified percentage composition of the mixture

(6) A change of more than 10% in the flow rate of the shielding gas

(7) A change in ferrule geometry

(8) A change of timer range or amperage range greater than ±5%

(9) A change in make or model of welding machine

(10) A change in base metal form from a flat surface to a pipe or tube surface having an outside diameter of 12 in. or less, but not the reverse

7.6.5 **Preparation of Test Specimens**. Ten consecutively welded stud test specimens are required to qualify each welding procedure. Essential welding information shall be recorded using a form similar to that in the Appendix.

7.6.6 **Procedure Qualification Tests and Acceptance Criteria**

7.6.6.1 The test welds shall have a well-formed circumferential flash over at least 75% of the periphery of the welded stud.[1] There shall be no undercutting of the stud above the welded joint.

7.6.6.2 Five test weld specimens shall be tested by bending each stud to an angle of at least 15° from the axis of the stud. The studs shall be left in the bent condition. A test jig as shown in Figure 7.1 or other suitable device shall be used for bending.

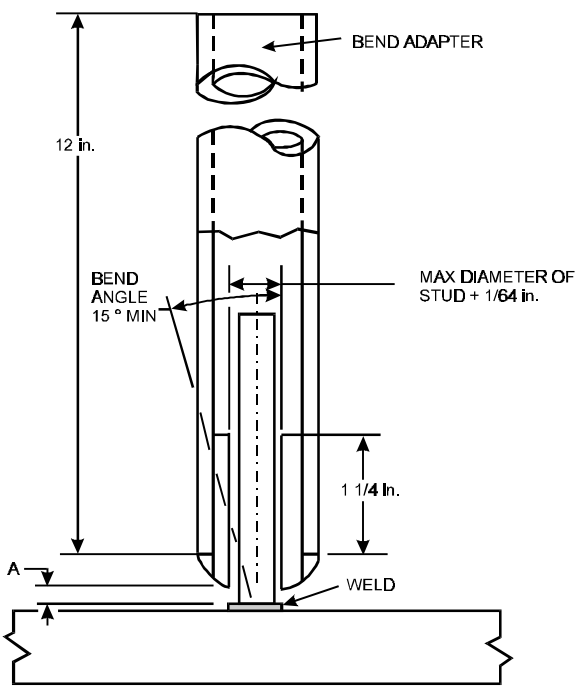

	in.		
STUD DIAMETER	1/4	3/8	1/2
ADAPTER GAP "A"	3/16	7/32	5/16

Figure 7.1 — Stud Welding Bend Jig (see 7.6.6.2)

Table 7.2

Minimum Required Torque Values and Tension Loads for Arc Stud Welding (F-22 Aluminum Alloy Studs) (see 7.6.6.4)

Stud Size	Tension Test: Option 1 Minimum Torque Value in.-lbf	Tension Test: Option 2 Minimum Tensile Load lbs
10 - 24	10	770
1/4 - 20 UNC	40	1360
5/16 - 18 UNC	70	2300
3/8 - 16 UNC	81	3250
7/16 - 14 UNC	140	4400
1/2 - 13 UNC	—	5950

7.6.6.3 **Acceptance Criteria — Bend Tests.** To pass the bend test requirements, all five studs shall exhibit no visible separation or fracture in the stud weld or heat-affected zones of the base metal or stud.

7.6.6.4 **Tension Test — Option 1.** Five test specimens shall be tested using a torque testing arrangement that is substantially in accordance with Figure 7.2. Minimum torque values for F-22 alloy studs are shown in Table 7.2. Minimum torque values for other F-number studs shall be as listed in the technical data package.

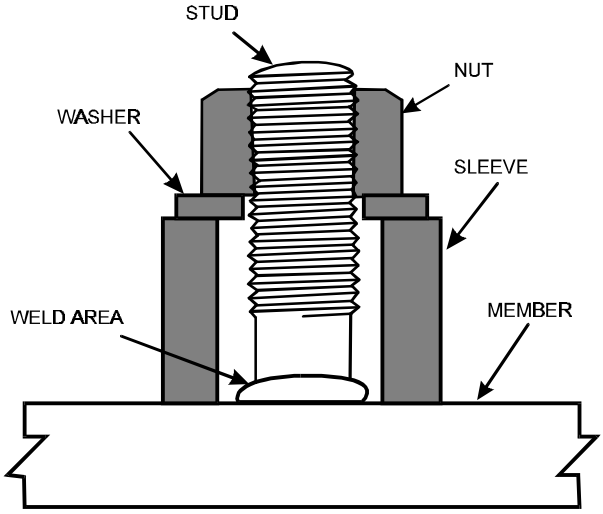

Figure 7.2 — Torque Testing Arrangement For Stud Welds (see 7.6.6.4)

7.6.6.5 **Tension Test—Option 2.** Five test specimens shall be tested in tension using commercial tension testing equipment designed

to properly grip the stud and base metal of the welded specimen. The load shall be applied axially until the stud fractures The load at which the specimen fractures is the ultimate tensile load. Minimum tensile load values for F-22 alloy studs are shown in Table 7.2. Minimum tensile load values for other F-number studs shall be as listed in the technical data package.

7.6.6.6 **Acceptance Criteria — Tension Tests.** To pass the tension test requirements, all five specimens (Option I or Option 2) shall meet the torque or tensile load values established for the stud alloy being qualified.

7.6.6.7 The contractor has the option to bend test the ten stud weld specimens in lieu of any tension testing.

7.6.7 A stud welding procedure shall be considered qualified if the test specimens meet the requirements of 7.6.6.1, 7.6.6.3 and 7.6.6.5, or 7.6.6.1 and 7.6.6.7.

7.6.8 **Welding Procedure Specifications**

7.6.8.1 A Welding Procedure Specification (WPS) shall be prepared for each stud welding application. The following information shall be included in the WPS:

(1) Equipment used:
  (a) Power supply
  (b) Stud gun
  (c) Timing equipment (controller)
  (d) Size and length of cable
(2) Stud material
(3) A sketch showing size and shape of studs and the section to be welded
(4) Base metal and thickness or thickness limits
(5) Gas shield type and flow
(6) Ferrule identification (number or sketch)
(7) Timer range setting
(8) Current and polarity
(9) Amperage range setting
(10) Lift setting
(11) Cleaning methods

7.6.8.2 Welding Procedure Specifications shall be available for examination by the Government. A suggested WPS Record form is shown in the Appendix.

7.7 Operator and Preproduction Qualification

7.7.1 Before production welding begins using a particular WPS, and at the beginning of each day's or shift's production, the first two studs shall be tested using material of similar thickness (±25%) and of the same material M-number as the production material.

7.7.2 After visual inspection to determine compliance with 7.6.6.1, the two studs shall be bent in accordance with 7.6.6.2.

7.7.3 Failure of either of the studs to meet the criteria specified in 7.7.2 shall cause the stud welding variables to be adjusted until two studs welded in accordance with the provisions of 7.7 pass the inspection requirements. If the changes to the procedure fall outside the limitation of variables in 7.6.4, a new Procedure Qualification Test and Welding Procedure Specification are required.

7.8 Acceptance Criteria — Production Welds

There shall be evidence of a well-formed circumferential flash over at least 75% of the periphery of the stud. There shall be no undercutting of the stud diameter above the welded joint. Welds failing to conform to these acceptance criteria shall be repaired in accordance with 7.10.

7.9 Mislocated Studs

7.9.1 When mislocated studs are required to be removed, they shall be completely removed by chiseling, rotary filing, thermal cutting or grinding using grinding wheels designated for use on aluminum.

7.9.2 The area where the mislocated stud was applied shall be thoroughly wire brushed, as stated in 7.4.2, and the surface contour of the base metal restored where required by applying weld filler metal by one of the welding processes allowed in section 4.

7.10 Repair of Misapplied Studs

During production welding, studs that do not exhibit flash for a full 75% of the periphery of the stud may be repaired by adding a fillet weld in the area of the missing flash. The fillet weld shall meet the requirements of 7.5.4 and extend beyond the area of missing flash.

Studs not meeting the Code requirements of 7.8 other than deficient flash shall be removed and replaced in accordance with 7.9.

Part C

Capacitor Discharge Stud Welding

7.11 General Requirements

7.11.1 Nonflanged studs shall be limited to a maximum base diameter of ¼ in., and flanged stud base diameters shall be limited to a maximum of 5/16 in., unless permitted by the technical data package.

7.11.2 For contact, gap, and drawn arc capacitor discharge stud welding, the size and shape of the stud tip or projection, or the weld-end geometry shall be designed to achieve sound welds. These characteristics and the shank shape or configuration shall be as specified in the drawings, specifications, or special provisions.

7.11.3 No ferrule is required.

7.11.4 Shielding gas is not required with the contact or gap capacitor discharge process. A suitable shielding gas shall be used with the drawn arc capacitor discharge process.

7.11.5 The minimum base metal thickness for capacitor discharge stud welding shall be no less than 25% of the base diameter of the stud.

7.12 Material Requirements

7.12.1 Studs shall be made from cold drawn or extruded stock of alloys shown below. Other alloys may be used when specified in the technical data package.

Aluminum Alloys For Capacitor Discharge Stud Welding Applications	
1100	5556
4043	6061
5183	6063
5356	

7.12.2 Studs shall not be anodized, painted. or coated with any foreign substance.

7.12.3 The contractor or manufacturer shall have a method of verification (purchase order, packing slip, etc.) that provides evidence that studs conform to 7.12.

7.12.4 Mechanical testing of aluminum stud alloys shall be in accordance with the applicable sections of ASTM B557, *Standard Methods of Tension Testing Wrought and Cast Aluminum and Aluminum-Alloy and Magnesium-Alloy Products,* or ANSI/AWS B4.0, *Standard Methods for Mechanical Testing of Welds.*

7.12.5 Stud bases for capacitor discharge welding studs may be flanged or nonflanged.

7.13 Workmanship

7.13.1 Studs shall be free from oil, moisture, excessive oxide, or other deleterious matter that would adversely affect the welding operation.

7.13.2 Base metal to which studs are to be welded shall be free of anodic coatings, moisture, or other injurious material to assure obtaining sound welds. These areas shall be cleaned by either etching, brushing with a stainless steel bristle brush, scraping, or grinding.

7.13.3 Welded studs shall meet the visual inspection requirements of 7.17.

7.14 Technique

7.14.1 Studs shall be welded with equipment that ensures the capacitors are fully charged to a preset value before the stud can be welded.

7.14.2 When required, welding grade shielding gas (argon, helium, or helium/argon mixtures) shall be used.

7.14.3 A wetting agent may be introduced in the weld area just prior to the weld being made.

7.15 Qualification Requirements

7.15.1 **General.** Prior to shop or field application, stud welding procedures shall be prepared and qualified according to the requirements of 7.15. The results of these tests shall be recorded on a stud procedure qualification record (PQR).

7.15.2 **Responsibility for Tests.** The contractor shall be responsible for the preparation and qualification of stud welding procedures. The Government should accept properly documented evidence of previous qualification of the stud welding procedures to be employed.

7.15.3 **Welding Procedure Qualification**

7.15.3.1 **Preparation of Stud Welding Procedures.** Stud welding procedures shall be established in accordance with 7.15.4, except that a procedure established for each of two thicknesses of base metal using the same

machine settings and conditions specified in the procedure qualification record may be used for all intermediate thicknesses. A suggested PQR form is shown in the Appendix.

7.15.3.2 **Welding Position.** Qualification in one position qualifies for all positions, except optional methods, GMAW or GTAW processes, which must be in accordance with 5.16.

7.15.4 **Limitation of Variables.** Any of the following changes shall require requalification of the stud welding procedure:

(1) A change in the base metal M-number

(2) A change in the F-number of the stud alloy or in the stud alloy, if the stud has no F-number

(3) A 25% in the nominal size or shape of the stud base

(4) A change of more than ±25% in the base metal thickness or thickness range qualified

(5) A change from a single shielding gas to any other gas, or to a mixture of gases, or a change of 10% or more in the specified percentage composition of the mixture

(6) A change of more than 10% in the flow rate of the shielding gas

(7) A change in capacitance (farads)

(8) A change in charging voltage

(9) A change in base metal form from a flat surface to a pipe or tube surface having an outside diameter of 12 in. or less, but not the reverse

(10) A change in make or model of welding machine

(11) Addition or deletion of a wetting agent

7.15.5 **Preparation of Test Specimens.** Ten consecutively welded stud weld test specimens are required to qualify each welding procedure. Essential welding information shall be recorded using a form similar to that in the Appendix.

7.15.6 **Procedure Qualification Tests and Acceptance Criteria**

7.15.6.1 The test welds shall have a well-formed circumferential flash over at least 75% of the periphery of the welded stud. There shall be no undercutting of the stud above the welded joint.

7.15.6.2 Five test weld specimens shall be tested by bending each stud to an angle of at least 15° from the axis of the stud. The studs shall be left in the bent condition. A test jig as shown in Figure 7.1 or other suitable device shall be used for bending.

7.15.6.3 **Acceptance Criteria — Bend Tests.** To pass the bend test requirements, all five studs shall exhibit no visible separation or fracture in the stud weld or heat-affected zones of the base metal or stud.

7.15.6.4 **Tension Test — Option 1.** Five test specimens shall be tested using a torque arrangement that is substantially in accordance with Figure 7.2. Minimum torque values for F-22 alloy studs are shown in Table 7.3. Minimum torque values for other F-number studs shall be as listed in the technical data package.

Table 7.3

Minimum Required Torque Values and Tension Loads for Capacitor Discharge Stud Welding (F-22 Aluminum Alloy Studs) (see 7.15.6.4)

Stud Size	Tension Test: Option 1 Minimum Torque Value in.-lbf	Tension Test: Option 2 Minimum Tensile Load lbs
6 - 32	3.5	375
9 - 32	7.5	635
10 - 24	10	770
1/4 - 20 UNC	40	1360
5/16 - 18 UNC	70	2300

7.15.6.5 **Tension Test — Option 2**. Five test specimens shall be tested in tension using commercial tension testing equipment designed to properly grip the stud and base metal of the welded specimen. The load shall be applied axially until the stud fractures. The load at which the specimen fractures is the ultimate tensile load. Minimum tensile load values for F-22 alloy studs are shown in Table 7.3. Minimum tensile load values for other F-number studs shall be as listed in the technical data package.

7.15.6.6 **Acceptance Criteria — Tension Tests**. To pass the tension test requirements, all five specimens (Option 1 or Option 2) shall meet the torque or tensile load values established for the stud alloy being qualified

7.15.6.7 The contractor has the option to bend test the ten stud weld specimens in lieu of any tension testing.

7.15.7 A stud welding procedure shall be considered qualified if the test specimens meet the requirements of 7.15.6.1, 7.15.6.3, and 7.15.6.6, or 7.15.6.1 and 7.15.6.7.

7.15.8 **Welding Procedure Specifications**

7.15.8.1 A Welding Procedure Specification (WPS) shall be prepared for each stud welding application. The following information shall be included in the welding procedure:

(1) Equipment used:
   (a) Power control
   (b) Stud gun
   (c) Size and length of cable
(2) Stud material
(3) A sketch showing size and shape of studs and the section to be welded
(4) Base metal and thickness or thickness limits
(5) Gas shield type and flow (if applicable)
(6) Capacitance and charging voltage
(7) Drop height
(8) Capacitor discharge method
(9) Cleaning method

7.15.8.2 Welding Procedure Specifications shall be available for examination by the Government. A suggested WPS form is shown in Appendix A.

7.16 Operator and Preproduction Qualification

7.16.1 Before production welding begins using a particular WPS, and at the beginning of each day's or shift's production, the first two studs shall be tested using material of similar thickness (±25%) and of the same material M-number as the production material.

7.16.2 After visual inspection to determine compliance with 7.15.6.1, the two studs shall be bent in accordance with 7.15.6.2.

7.16.3 Failure of either of the studs to meet the criteria specified in 7.16.2 shall cause the stud welding variable parameters to be adjusted until two studs welded in accordance with the provisions of 7.16 pass the inspection requirements. If the changes to the procedure fall outside the limitation of variables in 7.15.4, a new Procedure Qualification Test and Welding Procedure Specification are required.

7.17 Acceptance Criteria — Production Welds

There shall be evidence of a well-formed circumferential flash over at least 75% of the periphery of the stud. There shall be no undercutting of the stud diameter above the welded joint. Welds failing to conform to these acceptance criteria shall be repaired in accordance with 7.19.

7.18 Mislocated Studs

7.18.1 When mislocated studs are required to be removed, they shall be completely removed by chiseling, rotary filing, thermal cutting or grinding using grinding wheels designated for use on aluminum.

7.18.2 The area where the mislocated stud was applied shall be thoroughly wire brushed, as stated in 7.13.2, and the surface contour of the base metal restored where required by applying weld filler metal by one of the welding processes allowed in section 4, Technique.

7.19 Repair of Misapplied Studs

During production welding, studs that do not exhibit flash for a full 75% of the periphery of the stud may be repaired by adding a fillet weld in the area of the missing flash. The fillet weld shall meet the requirements of 7.5.4 and extend beyond the area of missing flash. Studs not meeting the Code requirements of 7.17 other than deficient flash shall be removed and replaced in accordance with 7.18.

Footnotes

1. The expelled metal around the base of the stud is designated as flash in accordance with the definition of upset in ANSI/AWS A3.0, Standard Welding Terms and Definitions.

8. Non-Critical Welding

Part A

General Requirements

8.1 Application

8.1.1 Application to Existing Drawings

8.1.1.1 For all existing engineering drawings, the current nomenclature, “MIL-STD-372, Class B” shall be equivalent to this requirement.

8.1.1.2 If a standard or specification on page 116 is listed as a cross reference to section 8, but the welds comply with the following requirements, section 8 of this Code shall apply.

(1) For all welds the following characteristics must be met:

(a) The weld must be a fillet weld, and shall be no larger than 5/16 inch.

(b) The weld shall not be longer than 18 continuous inches.

(2) For all welds within the vehicle, the item supported by the bracket, hanger, clip, footman loop, etc., welded under this limitation shall not exceed 35 pounds.

(3) For all welds on the exterior of the vehicle, the item supported by the bracket, hanger, clip, footman loop, etc., welded under this limitation shall not exceed 50 pounds.

8.1.1.3 Any deviation from the above requirements may be accomplished using the form in Appendix A.

8.1.2 Application to New Drawings

8.1.2.1 This class of weld is applicable to all weld joints whose failure would not result in injury to personnel, or in unfulfillment of an assigned mission. This class of welds is not applicable to ballistic joints.

8.1.2.2 In all drawings subsequent to this code, the weld shall be noted on the technical data package as follows: “Weld in accordance with UDLP/TACOM Ground Combat Vehicle Welding Code -- Aluminum, Section 8.”

8.2 Base Metal

(1) ASTM B26, Standard Specification for Aluminum Alloy Sand Castings

(2) ASTM B108, Standard Specification for Aluminum Alloy Permanent-Mold Castings

(3) ASTM B209, Standard Specification for Aluminum Alloy Sheet and Plate

(4) ASTM B210, Standard Specification for Aluminum Alloy Drawn Seamless Tubes

(5) ASTM B211, Standard Specification for Aluminum Alloy Bar, Rod, and Wire

(6) ASTM B221, Standard Specification for Aluminum Alloy Extruded Bar, Rod, Wire, Shapes, and Tubes

(7) ASTM B241, Standard Specification for Aluminum and Aluminum Alloy Seamless Pipe and Seamless Extruded Tube

(8) ASTM B247, Standard Specification for Aluminum Alloy Die and Hand Forgings

(9) ASTM B308, Standard Specification for Aluminum Alloy Standard Structural Shapes, Rolled or Extruded

(10) ASTM B313, Standard Specification for Aluminum and Aluminum Alloy Round Welded Tubes

(11) ASTM B361, Standard Specification for Factory Made Wrought Aluminum and Aluminum-Alloy Welding Fittings

(12) ASTM B429 Standard Specification for Aluminum-Alloy Extruded Structural Pipe and Tube

(13) ASTM B483, Standard Specification for Aluminum-Alloy Drawn Tubes for General Purpose Applications

(14) MIL-A-45225, Aluminum Alloy Armor, Forged

(15) MIL-A-46027, Aluminum Alloy Armor Plate, Weldable 5083 and 5456

(16) MIL-A-46063, Armor Plate, Aluminum Alloy, 7039

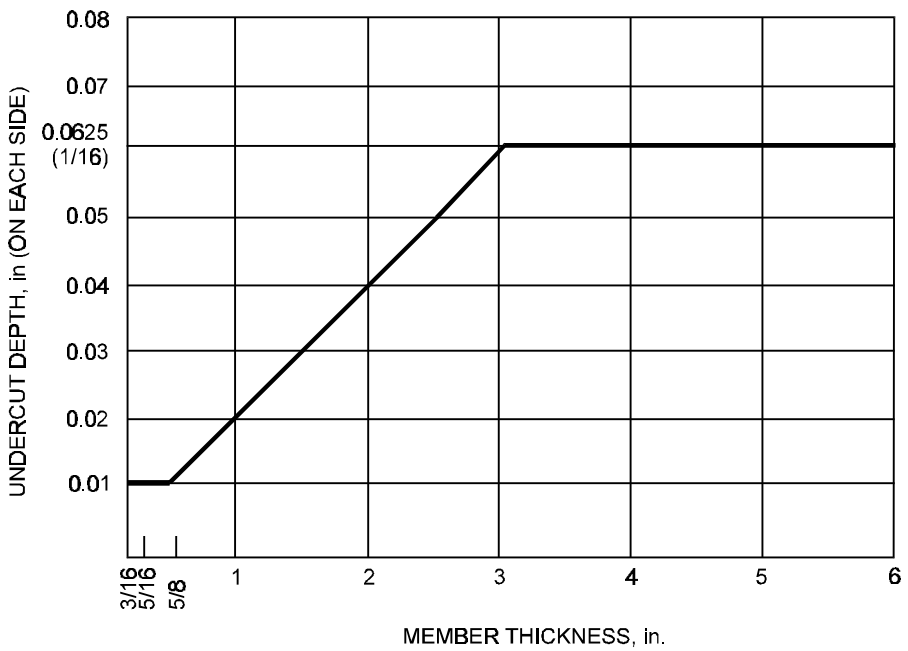

Figure 8.1 — Permissible Undercut Values (see 8.7.1, 9.7.1)

(17) MIL-A-46083, Aluminum Alloy Armor, Extruded Weldable

(18) MIL-A-46118, Aluminum Alloy Armor, 2219, Rolled Plate and Die Forged Shapes.

8.2.2 Combinations of base metals may be welded together provided that these materials are stipulated in the technical data package, and the intended welding procedure is qualified in accordance with 5 2.

8.2.3 When an alloy not listed in Table 1.1 is approved under the provisions of technical data package and is considered for use, the procedure to be used for welding shall be qualified by the contractor in accordance with the qualification requirements of sections 1 through 5.

8.2.4 Temporary backing (extension bars, run-off plates, etc.) shall meet the requirements of 4.9.4. Permanent backing shall be of the same M-number as the base material. Filler plates shall be of the same alloy as the base metal.

8.3 Filler Metal

The filler metal shall be selected from Table 1.2 for the base metal or metals used in manufacture.

Part B

Workmanship

8.4 Dimensional Tolerances

The dimensions of structural members shall be within the tolerances specified in the technical data package.

8.5 Temporary Welds

Temporary welds shall be subject to the same welding procedure as final welds (see 3.3.7.2).

8.6 Weld Termination

Weld terminations shall be subject to the provisions of 4.8

8.7 Quality of Welds

8.7.1 **Visual Inspection**. All welds shall be visually inspected. The visual weld inspection criteria shall be as follows:

(1) Unless otherwise specified, the weld shall have no cracks except in the start areas

as follows. Start cracks shall be permitted so long as they do not exceed .25 inch in length, or 20% of the weld length, whichever is less, reference Figure 8-2.

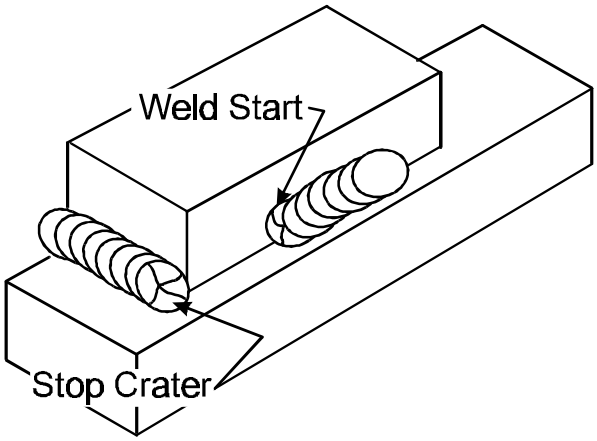

Figure 8.2 — Permissible Cracks in the Stop Region of a Weld

(2) Incomplete fusion existing between adjacent layers of weld metal, and between weld metal and base metal not to exceed 20% of the material thickness, or .06 in., whichever is less to a length not to exceed 5T.

(3) Weld profiles are in accordance with 3.5.

(4) Except as provided herein, undercut shall not exceed the values permitted in Figure 8.1. The undercut may be twice the value permitted in Figure 8.1 for an accumulated length no greater than 2 in. in any 12 inches of weld, but in no case may undercut on one side be greater than 1/16 in. For welds less than 12 in., the permitted length shall be proportional to the actual length.

(5) Melting of corners shall not be considered undercut, and shall not exceed .2T or .125 inch, whichever is less. Melting of edges on lap joints shall not be considered undercut. Welds shall meet minimum size.

(6) A fillet weld in any single continuous weld may be less than the nominal fillet weld size required by 1/16 in. without correction, provided that the undersized portion of the weld does not exceed 10% of the length of the weld.

(7) Crater cracks contained entirely within the crater area of a weld shall be permitted, reference Figure 8.2

(8) Porosity open to the surface shall not have sharp tails. Porosity shall be limited to 13 pores in 1 sq. in. of weld face, of which no more than 4 pores shall be between .032 in. and .094 in. in diameter, and no pore shall exceed .095 in. in diameter. Total porosity in 10 sq. in. of weld face shall not exceed 30 pores, .094 in. in diameter or less.

(9) Overlap shall not exceed 2T in any 12 in. of weld length, except imperfections shall be removed if they exhibit sharp radii, or sharp terminations that are crack-like; if the depression is not larger than permitted, they need not be rewelded. For welds less than 12 in., the permitted length shall be proportional to the actual length.

(10) Mismatch shall not exceed .180 in., or .1T, whichever is less.

(11) Melt-through shall not be rejectable, so long as the melt-through does not interfere with the fit or performance of a mating part.

(12) Burn-through is not acceptable, and must be repaired.

8.7.2 **Liquid Penetrant Inspection.** Welds that are subject to liquid penetrant inspection shall be unacceptable if the inspection confirms the presence of surface cracks which render the weld unacceptable on the basis of the requirements for visual inspection.

9. Critical Welding (Except Ballistic Structures)

Part A

General Requirements

9.1 Application

9.1.1 For all existing engineering drawings, the current nomenclature, “MIL-STD-372, Class A” shall be equivalent to this requirement.

9.1.2 This class of weld is applicable to all weld joints where failure of the joint would likely result in personnel injury, loss of life, or a mission-critical failure.

9.1.3. In all drawings subsequent to this code, the weld shall be noted on the technical data package as follows: “Weld in accordance with UDLP/TACOM Ground Combat Vehicle Welding Code -- Aluminum, Section 9.”

9.2 Base Metal

9.2.1 The base metal to be welded under this Code shall be one listed in Table 1.1 and shall conform to the requirements of the latest edition of the applicable specification listed below except as noted in 9.2.3:

(1) ASTM B209, Standard Specification for Aluminum-Alloy Sheet and Plate

(2) ASTM B210, Standard Specification for Aluminum Alloy Drawn Seamless Tubes

(3) ASTM B211, Standard Specification for Aluminum-Alloy Bar, Rod, and Wire

(4) ASTM B221, Standard Specification for Aluminum-Alloy Extruded Bar, Rod, Wire, Shapes, and Tubes

(5) ASTM B241, Standard Specification for Aluminum and Aluminum Alloy Seamless Pipe and Seamless Extruded Tube

(6) ASTM B247, Standard Specification for Aluminum-Alloy Die and Hand Forgings

(7) ASTM B308, Standard Specification for Aluminum-Alloy Standard Structural Shapes, Rolled or Extruded

(8) ASTM B313, Standard Specification for Aluminum and Aluminum Alloy Round Welded Tubes

(9) ASTM B361, Standard Specification for Factory Made Wrought Aluminum and Aluminum-Alloy Welding Fittings

(10) ASTM B429 Standard Specification for Aluminum-Alloy Extruded Structural Pipe and Tube

(11) ASTM B483, Standard Specification for Aluminum-Alloy Drawn Tubes for General Purpose Applications

(12) MIL-A-45225, Aluminum Alloy Armor, Forged

(13) MIL-A-46027, Aluminum Alloy Armor Plate, Weldable 5083 and 5456

(14) MIL-A-46063, Armor Plate, Aluminum Alloy, 7039

(15) MIL-A-46083, Aluminum Alloy Armor, Extruded Weldable

(16) MIL-A-46118, Aluminum Alloy Armor, 2219, Rolled Plate and Die Forged Shapes.

9.2.2 Combinations of base metals may be welded together, provided that the materials are permitted in the technical data package, and the welding procedure is qualified in accordance with 5.2.

9.2.3 When an alloy not listed in Table 1.1 is approved under the provisions of technical data package and is considered for use, the procedure to be used for welding shall be qualified by the contractor in accordance with the qualification requirements of sections 1 through 5.

9.2.4 Temporary backing (extension bars, run-off plates, etc.) shall meet the requirements of 4.9.4. Permanent backing shall be of the same M-number as the base material. Filler plates shall be of the same alloy as the base metal.

9.3 Filler Metal

The filler metal shall be selected from Table 1.2 for the base metal or metals used in manufacturing.

Part B

Workmanship

9.4 Dimensional Tolerances

The dimensions of structural members shall be within the tolerances specified the technical data package.

9.5 Temporary Welds

Temporary welds shall be subject to the same welding procedure as final welds.

9.6 Weld Terminations

Weld terminations shall be subject to the provisions of 4.8.

9.7 Quality of Welds

9.7.1 **Visual Inspection.** All welds shall be visually inspected. The visual acceptance criteria shall be as follows:

(1) The weld shall have no surface cracks.

(2) Incomplete fusion existing between adjacent layers of weld metal, and between weld metal and base metal not to exceed 10% of the weld thickness, or .05 in., whichever is less to a length not to exceed 5T.

(3) All craters are filled in accordance with 4.8.

(4) Weld profiles are in accordance with 3.5.

(5) Except as provided herein, undercut shall not exceed the values shown in Figure 8.1 for an accumulated length of 2 in. in any 12 in. length of weld. For weld lengths less than 12 in., the permitted length shall be proportional to the actual length.

(6) A fillet weld in any single continuous weld may be less than the nominal fillet weld size required by 1/16 in. without correction, provided that the undersized portion of the weld does not exceed 10% of the length of the weld..

(7) Porosity open to the surface shall not have sharp tails. Porosity shall be limited to 13 pores in 1 sq. in. of weld face, of which no more than 4 pores shall be between .032 in. and .094 in. in diameter, and no pore shall exceed .095 in. in diameter. Total porosity in 10 sq. in. of weld face shall not exceed 30 pores, .094 in. in diameter or less.

(8) Overlap shall not exceed 1T in any 12 in. of weld length, except imperfection shall be removed if they exhibit sharp radii, or sharp terminations that are crack-like; if the depression is not larger than permitted, they need not be rewelded. For welds less than 12 in., the permitted length shall be proportional to the actual length.

(9) Melting of corners shall not be considered undercut, and shall not exceed .2T or .125 inch, whichever is less. Melting of edges on lap joints shall not be considered undercut. Welds shall meet minimum size.

(10) Mismatch shall not exceed .180 in., or .1T, whichever is less.

(11) Melt-through shall not be rejectable, so long as the melt-through does not interfere with the fit or performance of a mating part.

(12) Burn-through is not acceptable, and must be repaired.

9.7.2 **Radiographic Examination**. The extent of radiographic examinations shall be as specified in the technical data package. Welds shall be unacceptable if the radiographs show any cracks or any of the types of discontinuities specified in 9.7.2.1 through 9.7.2.4.

9.7.2.1 **Porosity**—with sharp tails.

9.7.2.2 **Porosity**, (defined in Table 9.1, Notes 1 and 2). Maximum permissible porosity in radiographs per 3 in. length of weld is shown in Table 9.1 and defined in (1) through (4) as follows:

(1) Assorted porosity is acceptable, provided that the combination of the various sizes does not exceed the total area of indications permitted for a 3 in. length of weld.

(2) For welds of larger size than considered in Table 9.1, the total area of porosity as determined from the radiographic film shall not exceed 0.101E square inches in any 3 in. length of weld, where E is the actual weld size. When a joint is comprised of more than one weld superimposed on radiographic film, E is the sum of the weld sizes. If the weld is less than 3 in. long, the total allowable area of porosity shall be reduced in direct proportion.

Table 9.1

Maximum Acceptable Porosity[1,2] in Radiographs for Any 3 in. Length of Weld (see 9.7.2)

		Large Pores		Medium Pores		Fine Pores	
(E) Weld Size[3] (in.)	Total Area[4] Permitted (sq. in.)	Major Dimension (in.)	Max No.	Major Dimension (in.)	Max No.	Major Dimension (in.)	Max No.
1/8	.012			.062	3	.031	15
1/4	.025	.125	2	.062	8	.031	31
3/8	.038	.125	3	.062	12	.031	47
1/2	.050	.125	4	.062	16	.031	62
5/8	.063	.125	5	.062	20	.031	78
3/4	.076	.125	6	.062	25	.031	95
7/8	.088	.125	7	.062	28	.031	110
1.0	.101	.125	8	.062	32	.031	126

Notes:

1. Porosity may be circular, elliptical, conical or irregular in shape. The major dimension shall be measured in determining the size of an indication. The porosity may be a void or a tungsten or a non-metallic inclusion. Copper or ferrous inclusion shall not be permitted in the welds.
2. Only that porosity whose major dimension exceeds 1/64 in. shall be considered relevant in evaluating the radiographic soundness criteria.
3. Values for intermediate sizes shall be determined by interpolation.
4. The maximum number of pores allowed is determined by the total area permitted for the type of pore (large, medium, or fine) being counted.

(3) The maximum dimension of porosity shall be E/2 in., or ¼ in., whichever is less.

(4) Aligned porosity is defined as a sequence of four or more pores at the root of the weld when they touch a line parallel to the length of the weld drawn through the center of the outer pores. It shall be acceptable provided that the cumulative sum of the pore diameters does not exceed E/1.5 in one root and E for both roots, in a length of 6E in. or 3 in., whichever is less.

9.7.2.3 **Inadequate Joint Penetration.** Unless otherwise specified, the following conditions of inadequate joint penetration shall be permitted:

(a) Less than or equal to 1/32 in. image width — full length of the weld.

(b) Greater than 1/32 in. image width, but less than 1/16 in. — no more than 4T in 8T of weld length.

(c) Greater than or equal to 1/16 in. image width — none allowed.

9.7.2.4 **Incomplete Fusion.** Incomplete fusion shall be treated in accordance with the limitations for inadequate joint penetration, 9.7.2.3.

9.7.3 **Ultrasonic Testing.** The extent of ultrasonic testing shall be as specified in the technical data package. Welds shall be unacceptable if the ultrasonic tests show any cracks or any of the types of discontinuities specified in 9.7.2.1 through 9.7.2.4.

9.7.4 **Liquid Penetrant Inspection.** Welds that are subject to liquid penetrant inspection shall be unacceptable if the inspection confirms the presence of surface cracks which render the weld unacceptable on the basis of the requirements for visual inspection.

10. Ballistic Welding

Part A

General Requirements

10.1 Application

10.1.1 For all existing engineering drawings, the current nomenclature, “MIL-STD-1946” shall be equivalent to this requirement.

10.1.2 This class of weld is applicable to weld joints in a ballistic structure which are critical to the ballistic integrity of the structure. Weld joint which are not critical to the ballistic integrity of a ballistic structure may be specified with non-ballistic weld classes. Non-ballistic weld classes, as defined in Sections 8 and 9, may be specified on the same ballistic structure.

10.1.3 In all drawings subsequent to this code, the weld shall be noted on the technical data package as follows: “Weld in accordance with UDLP/TACOM Ground Combat Vehicle Welding Code -- Aluminum, Section 10.”

10.2 Base Metal

10.2.1 The base metal to be welded under this Code shall be limited to those listed below:

(1) MIL-A-45225, Aluminum Alloy Armor, Forged

(2) MIL-A-46027, Aluminum Alloy Armor Plate, Weldable 5083 and 5456

(3) MIL-A-46063, Armor Plate, Aluminum Alloy, 7039

(4) MIL-A-46083, Aluminum Alloy Armor, Extruded Weldable

(5) MIL-A-46118, Aluminum Alloy Armor, 2219, Rolled Plate and Die Forged Shapes.

10.2.2 Combinations of base metals may be welded together, provided welding procedure is qualified in accordance with 5.2, 10.6 and 10.9.

10.2.3 Temporary backing (extension bars, run-off plates, etc.) shall meet the requirements of 4.9.4. Permanent backing shall be of the same M-number as the base material. Filler plates shall be of the same alloy as the base metal.

10.3 Filler Metal

The filler metal shall be selected from Table 1.2 for the base metal or metals used in manufacture.

Part B

Workmanship

10.4 Temporary Welds

10.4.1 Temporary welds shall be subject to the same welding procedure and quality requirements as final welds.

10.5 Weld Terminations

Weld terminations shall be subject to the provisions of 4.8.

10.6 Ballistic Certification

10.6.1 **Ballistic Testing**

10.6.1.1 Ballistic weld procedures that have been previously qualified shall be considered acceptable by the Government for other ballistic weldments provided the limitations of 5.16 and the joint type/design tolerances are maintained.

10.6.1.2 Ballistic testing will be carried out, in accordance with the requirements of 10.9 at any TECOM-approved test agency. The contractor or manufacturer shall fabricate ballistic test samples (10.6.1.4) prior to beginning production. Certification shall be issued upon acceptable performance of the material under ballistic shock test (10.9).

10.6.1.3 Unless otherwise specified, when a change in any factor of the WPS outside the limitations specified in 5.16, or as listed below, is desired, a new PQR shall be submitted for approval. Recertification shall be conducted in the same manner as in the original certification procedure.

(a) A change is made from mechanical to thermal or a combination of mechanical and thermal to thermal edge preparation.

(b) A change is made from a mechanical to a thermal method of preparing the root of joint before welding the second side, but not vice versa.

10.6.1.4 Ballistic weld joints will be categorized by armor material types and joint design. Representative samples of each type may be selected by the procuring activity in consideration of material thickness and plate obliquity.

10.6.1.5 Ballistic test samples shall be welded using the contractor’s PQR for the joint

represented. Geometry and dimensions of the test sample shall be specified by the procuring activity. Figure 10.1 illustrates types of ballistic test samples.

10.6.1.6 The contractor or manufacturer shall radiograph and penetrant inspect ballistic test sample plates prior to submission for ballistic testing. The radiographs shall be made in accordance with the radiographic position chart and shall be sent to the TECOM-approved test agency with the ballistic test samples.

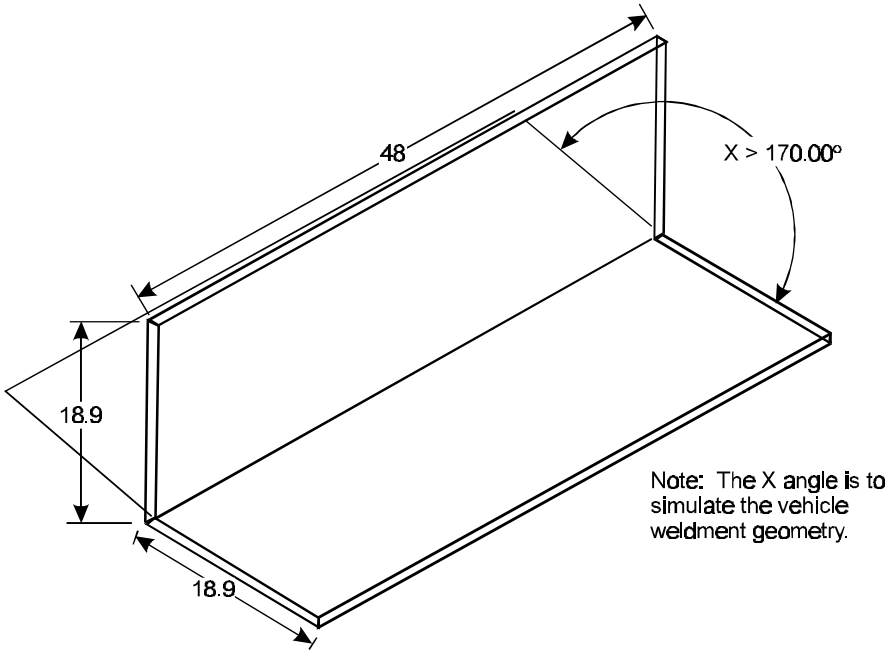

A. Corner joint sample for ballistic shock test.

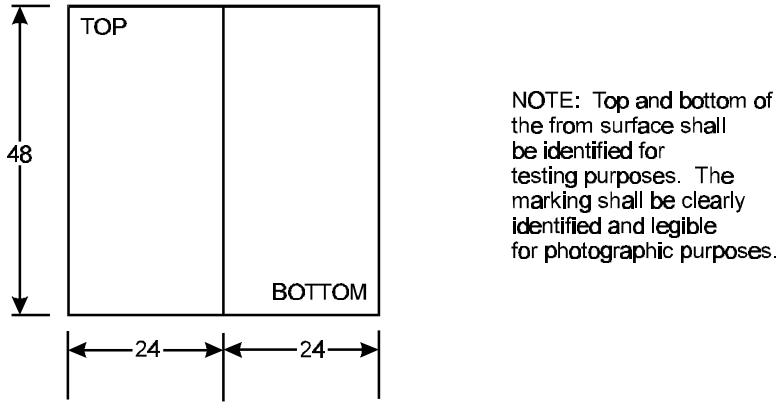

B. Flat weldment sample for ballistic shock test,
(For vertex angles less than 10 degrees)

Figure 10.1 — Example of Specimen Size, or Orientation, and Markings for Ballistic Test.

10.6.2 **Marking of Test Samples.**

10.6.2.1 **Original Submissions**. Each ballistic test sample shall be marked for easy identification. Marking shall be in letters, digits or both, clearly legible and shall include the specimen identification, submission date, contractor's name or trademark, and top and bottom, and front and back identification. The information shall be marked on the specimen as specified by the test director. The impact side of each sample shall be marked "IMPACT SIDE" with letters at least 25.4 mm (1 inch) high.

10.6.2.2 **Retest Samples.** Retest samples shall be marked with the original test sample identification, and any additional identification specified. This will be followed by the letter "R" to indicate retest.

10.6.3 **Submission of Data.** Unless otherwise specified, the WPS data and the radiographic inspection report, including elements (a) through (e) in the following listing shall be submitted with each ballistic test sample:

(a) Ballistic plate number

(b) Manufacturers name and address

(c) Contract number

(d) Thickness of plates

(e) Plate specification number

10.6.4 **Ballistic Testing**

10.6.4.1 **Preliminary Ballistic Testing.** The ballistic test sample submitted to the test agency for ballistic shock testing may be subjected to a radiographic inspection (10.8.2) at the testing agency. On passing the radiographic inspection requirement it shall then be subjected to the ballistic shock test in accordance with 10.9

10.6.4.2 **Request for Retest**. If a ballistic test sample fails to pass, the contractor or manufacturer, upon notification can immediately request a retest. If no request is made within 10 days after notification, the PQR and or joint design shall be rejected.

10.6.4.3 **Retest Sample Submission.** If the contractor or manufacturer requests a retest, two additional test specimens shall be submitted to the test agency for test. The samples shall be welded by the established PQR used for the original test specimen and marked in accordance with 10.6.2.2. Failure of either sample in the retest shall be cause for rejection of the PQR.

10.7 Macro Specimens

10.7.1 **Number and type of test specimens.** One macro specimen shall be made for each type of joint included in PQR. This specimen may be cut from the ballistic test specimen (Figure 10.1) so long as the dimensions of Figure 10.1 are met.

10.8 Quality of Welds

10.8.1 Visual Inspection. All welds shall be visually inspected. The visual weld inspection criteria shall be as follows:

(1) The weld shall have no surface cracks.

(2) Incomplete fusion exists between adjacent layers of weld metal, and between weld metal and base metal not to exceed 10% of the weld thickness, or .03 in., whichever is less to a length not to exceed 1T.

(3) All craters are filled in accordance with 4.8.

(4) Weld profiles are in accordance with 3.5.

(5) Except as provided herein, undercut shall not exceed the values shown in Figure 8.1 for an accumulated length of 2 in. in any 12 in. length of weld. For weld lengths less than 12 in., the permitted length shall be proportional to the actual length.

(6) A fillet weld in any single continuous weld may be less than the nominal fillet weld size required by 1/16 in. without correction, provided that the undersized portion of the weld does not exceed 10% of the length of the weld.

(7) Porosity open to the surface shall not have sharp tails. Porosity shall be limited to 6 pores in 1 sq. in. of weld face, of which no more than 2 pores shall be between .032 in. and .094 in. in diameter, and no pore shall exceed .095 in. in diameter. Total porosity in 10 sq. in. of weld face shall not exceed 15 pores, .094 in. in diameter or less.

(8) Overlap shall not exceed 1T in any 12 in. of weld length, except imperfection shall be removed if they exhibit sharp radii, or sharp terminations that are crack-like; if the depression is not larger than permitted, they need not be rewelded. For welds less than 12 in., the permitted length shall be proportional to the actual length.

(9) Melting of corners shall not be considered undercut, and shall not exceed .2T or .125 inch, whichever is less. Melting of edges on

lap joints shall not be considered undercut. Welds shall meet minimum size.

(10) Mismatch shall not exceed .180 in., or .1T, whichever is less.

10.8.2 **Radiographic Examination.**

10.8.2.1 The extent of radiographic examinations shall be as specified in the contract documents.

10.8.2.2 **Radiographic Position Drawings.** A radiographic position drawing and welding assembly drawings shall be submitted to the procurement activity for review and acceptance in establishment of radiographic standards and Routine Positions. This drawing contain the following:

(a) An isometric or plan view or both of the weldment.

(b) Identification, by letter or number(s) of the joint(s) to be radiographed as identified on the assembly drawing.

(c) Identification of positions by letter or number.

(d) Cross-section of the joint(s) showing the identification and type of the joint(s), by symbol and the thickness of the mating pieces.

(e) A table entitled “Routine Positions” containing five columns entitled “Position, front”, “Position, rear”, “Position, left side”, “Position, right side”, and “Film size”.

(f) A table entitled “Random Positions” containing two columns entitled “Positions” and “Film size”.

(g) Notes, reading as follows:

(1) “Random shots” to be selected by the contractor and approved by the Government.

(2) Unless otherwise specified, the requirements and discontinuity types specified in 9.7.2 shall serve as a basis for the radiographic acceptance standards to be prepared by the procuring or design agency. However, the 1/32 inch lack of penetration at the apex of the weld joint described in 9.7.2.3 (a) does not apply to high current density joint geometry. The radiographic acceptance standards shall be indicated on the applicable radiographic position chart, drawing or contract requirement.

(3) Routine position shall be radiographed in such a way as to cover all the left side joint types as specified on the radiographic position chart on alternating lots. The same procedure will be followed for the right side. One hundred percent joint type coverage will be achieved over a span of 2 control weldments.

(4) If the radiographs appear questionable as to acceptability, additional radiographs shall be taken.

(5) The frequency of radiographic inspection shall be as shown in Table 10.1, unless otherwise specified.

10.8.3 **Inspection of Production Weldments.**

10.8.3.1 **First Production Weldment.** The first weldment in production shall be radiographed so as to attain 100% coverage of all joint types indicated on the radiographic position drawing. Subsequent weldments will be radiographed in those areas that were defective until compliance is met. This is accomplished through a phase out of rejections.

10.8.3.2 **Spot Checking.** After the requirements in 10.8.3.1 have been met, joints will be spot checked by radiography in accordance with 10.8.2.2 (g) (1) and (3). Usually only one radiograph shall be required on any specific joint with a frequency as controlled by Table 10.1. Thus, spot checking will not usually require radiographing of all joints in a single weldment. If an area is found rejectable when spot checking, the remainder of the joint will be radiographed unless otherwise specified. Cracks ½ in. or less at either end of a weld joint shall not require radiography of the remainder of the weld joint.

10.8.3.3 **Checking of Rejectable Random Position.** When spot checking random positions in accordance with 10.8.3.2 reveals rejectable discontinuities, additional radiography may be required as prescribed in accordance with Table 10.2.

10.8.3.4 Checking of Rejectable Routine Positions. When radiographs required in 10.8.3.2 indicates an area or areas that do not conform to the radiographic standard, the corresponding joint on the next available

Table 10.1

Typical Inspection Frequency Table

Acceptance Rate, %	Inspection Frequency Based on Production Rate		
	> 30 units/month	15-30 units/month	<15 units/month
100	1 in 40 units	1 in 30 units	1 in 25 units
≥ 99 to 100	1 in 35 units	1 in 25 units	1 in 20 units
≥ 98 to 99	1 in 30 units	1 in 20 units	1 in 15 units
≥ 97 < 98	1 in 20 units	1 in 15 units	1 in 10 units
≥ 96 < 97	1 in 15 units	1 in 10 units	1 in 5 units
≥ 95 < 96	1 in 10 units	1 in 5 units	1 in 3 units
≥ 94 < 95	1 in 5 units	1 in 3 units	each unit
≥ 93 < 94	1 in 3 units	each unit	
≥ 92 < 93	each unit		
Averaging Number	5 samples	3 samples	2 samples
	Rolling Average		

weldment from production (not to exceed 5) shall be radiographed. With the exception of cracks ½ in. or less, as noted in 10.8.3.2, if a rejectable discontinuity is found, the entire joint will be radiographed. If no rejectable discontinuities are found, spot checking will be resumed. Complete radiography of the corresponding joint shall be continued with each consecutive weldment produced until a joint with no rejectable discontinuities is obtained.

All rejectable discontinuities in any joint shall be repaired. Radiographs of the repaired areas shall conform to the original radiographic standard specified.

10.8.4 **Ultrasonic Testing.** When ultrasonic testing is required by the technical data package, the testing procedure and acceptance criteria shall be specified therein.

10.8.5 **Liquid Penetrant Inspection.** Welds that are subject to liquid penetrant inspection shall be unacceptable if the inspection confirms the presence of defects which render the weld unacceptable on the basis of the requirements for visual inspection.

10.9 Ballistic Shock Test Procedure

10.9.1 **Temperature Conditioning of Samples.** Prior to the ballistic shock test, the welded joint test sample shall be held at a temperature 72 ±15°F for at least eight hours. Testing shall be

Table 10.2

"Consecutives" Table for Random Positions

Types of discontinuities	Consecutive radiography and spot checking on subsequent samples not required	Consecutive radiography required if next sample exhibits the same rejectable discontinuity	Immediate radiography required (next available production unit – max 5)*
Cracks	For any cumulative length ≤0.5 in. in any 12 in. weld length	For any cumulative length >0.5 in., ≤1.0 in. in and 12 in. weld length	For any cumulative length >1.0 in. in and 12 in. weld length
Incomplete penetration >1/32 in., ≤1/16 in. image width	NA	≤6T indication in any 8T weld length	>6T indication in any 8T weld length
Incomplete penetration >1/16 in. image width	NA	≤1T cumulative indication in any 8T weld length	>1T cumulative indication in any 8T weld length
Linear porosity sum of the diameters Single root – E/1.25 max and/or both roots E/0.75 max	In 3 in. weld length	In ≥2 <3 in. weld length	In <2 in. weld length
Scattered porosity (Max pore area .151E)	In 3 in. weld length	In ≥2 <3 in. weld length	In <2 in. weld length
Max dimension of an individual pore	N/A	>0.25 ≤0.375 in	>0.375 in.

* If the defect severity level is twice the allowance in column 4, or full length of the weld joint (whichever is applicable) on the sample selection and the next weldment inspected, all intervening weldments will be inspected.

conducted immediately upon completion of the hold period at an ambient temperature of 72 ±15°F.Material

10.9.2.1 **Welded Joint Armor Thickness.** Unless otherwise specified, the test thickness ranges using 75 mm M1002A aluminum plate proofing projectiles against the 5083, 7039 and 2519 aluminum alloy armor are as shown in

Tables 10.3, 10.4 and 10.7. The test thickness ranges using the 57 mm M1001A aluminum plate proofing projectiles against the same alloys are as shown in Tables 10.5 and 10.6.

10.9.2.2 **Test Sample Thickness Measurement.** Unless otherwise specified, each of the two components making up the welded joint shall be measured for thickness in at least four locations at least 1 in. from the edges. Thickness shall be read to the nearest 0.001 in. using a micrometer. The average of the readings taken on each component shall be considered as the thickness of the plate, forging or extrusion.

10.9.3 **Test Fixture.** The ballistic test sample shall be supported rigidly using wedges as necessary in an appropriate test fixture selected by the test director. A 30-in. distance between supports shall be sustained for flat weldments.

10.9.4 **Test Obliquity.** The line of fire shall be perpendicular to the sample surface at the impact location (zero degrees obliquity).

10.9.5 **Fair Impact.** A fair impact is one which meets the requirements of 10.9.4, 10.9.6, 10.9.7 and 10.9.8.

10.9.6 **Impact Location.**

10.9.6.1 **Corner Joint (Various Angles).** Unless otherwise specified, the impact location shall be measured from the backside of the plate (<170°). The center of the projectile impact shall be within 2 ± ½ in. from the toe of the weld on the backside. If the backside of the weld joint design does not have a weld, then the impact location shall be measured from the intersection of the two plates on the backside. The aiming point for the center of the first impact (10.9.8.1) shall be 13 ±1 in. from the top of the target. The second impact shall be 13 ±1 in. from the bottom of the target, or as otherwise required by the test director.

10.9.6.2 **Flat Weldments.** Unless otherwise specified, the impact location shall be no further than ½ in. from the centerline of the weld and between 12 in., and 13 in. from the top of the test sample.

10.9.7 **Striking Velocities.**

10.9.7.1 **Corner Joints.** Striking velocities shall be chosen from Tables 10.3 through 10.7 based on the alloy and thickness of the plate to be impacted. Striking velocities on alloys not covered by these tables shall be as agreed upon in the contract.

10.9.7.2 **Flat weldments.**

10.9.7.2.1 **Weldment Made of Two Plates of Same Material and Thickness.** Striking velocities shall be chosen from Table 10.3 for impacts on 5083 alloy armor, from Table 10.4 for impacts on 7039 alloy armor and from Table 10.7 for impacts on 2519 alloy armor. Striking velocity on other armor types shall be as agreed upon in the contract.

10.9.7.2.2 **Weldment Made of Two Plates of Different Alloys But Same Thickness.** The striking velocity shall be that which is required for the weaker alloy.

10.9.7.2.3 **Weldment Made of Two Plates of Different Alloys and Thicknesses.** The striking velocity shall be the lower of the two considering the alloy and thickness.

10.9.8 **Number of impacts**

10.9.8.1 **Corner Joints.** One fair impact is required on each of the two pieces making up the welded joint. The thinner of the two plates or components shall be impacted first. Should a third round be required, the procedure of 10.9.13 shall be followed.

10.9.8.2 **Flat weldments**. One fair impact is required on the welded joint. Should a second round be required, the procedure of 10.9.11.2 shall be followed.

10.9.9 **Photographic Record and Inspection of Impact Area.** Close up photographs of the front and back of the impacted area showing any cracks present shall be taken after each impact. Front, back and length of cracking shall be clearly identified for photographic records. The impacted area shall be inspected with liquid dye penetrant in accordance with MIL-STD-6866 whenever visual crack length approaches the maximum permitted.

10.9.10 **Excessive Cracking on a First Round Fair Impact.** Excessive cracking (10.9.14) shall be cause for rejection of the PQR for that joint design.

10.9.11 **Second Impacts.**

10.9.11.1 **Corner Joints.** After a first round fair impact without excessive cracking, the second impact shall be on the plate not previously impacted and at the opposite end of the sample (section 10.9.6). Should excessive cracking occur on the second impact, it will be cause for rejecting the weld procedure for that joint design.

TABLE 10.3
Striking Velocity Requirements for 5083 Aluminum Alloy Using the 75 mm Aluminum M1002A Plate Proofing Projectile. (See 10.9.2)

Thickness, in.	Striking Velocities[(a)], fps(mps)
0.625	595 (181)
0.750	770 (235)
1.000	800 (244)
1.125	900 (274)
1.250	985 (300)
1.375	1065 (325)
1.500	1155 (352)
1.625	1310 (399)
1.750	1420 (433)

Table 10.4
Striking Velocity Requirements for 7039 Aluminum Alloy Using the 75-mm Aluminum, M1002A Plate Proofing Projectile. (See 10.9.2)

Thickness, in.	Striking Velocities[(a)], fps(mps)
0.875	550 (177)
1.000	780 (238)
1.125	870 (265)
1.250	965 (294)
1.375	980 (299)
1.500	995 (303)
1.625	1240 (378)
1.750	1370 (418)
1.875	1390 (424)
2.000	1410 430)

10.9.11.2 **Flat weldments.** Should a second round be needed due to a previous “No Test” (10.9.13) condition, the second round shall be impacted 12 to 13 in. from the bottom of the front of the weld joint. No more than two impacts shall be placed on a flat weldment sample for acceptance purposes.

10.9.12 **Third impacts** Should a third round be needed on a corner joint sample due to a previous “No Test” condition (10.9.13) the third round impact shall be midway between the first two rounds ±2 in. and on the plate which sustained the “No Test” impact. No more than three impacts shall be placed on a corner joint sample for acceptance purposes.

Table 10.5
Striking Velocity Requirements for 5083 Aluminum Alloy Using the 57-mm Aluminum M1001A Plate Proofing Projectile. (See 10.9.2)

Thickness, in.	Striking Velocities[(a)], fps
0.500	To be determined
0.625	To be determined
0.750	To be determined

Table 10.6
Striking Velocity Requirements for 7039 Aluminum Alloy Using the 57-MM Aluminum M1001A Plate Proofing Projectile. (See 10.9.2)

Thickness, in.	Striking Velocities[(a)], fps(mps)
0.500	693 (211)
0.625	920 (280)
0.750	To be determined
0.875	To be determined

Table 10.7
Striking Velocity Requirements for 2519 Alloy Aluminum Armor Weldments Using the 75-mm, M1002A Aluminum Plate Proofing Projectile.

Thickness, in.	Striking Velocities, fps(mps)
1.00	673 (205)
1.25	1027 (313)
1.50	1226 (374)

(a) ±33 fps (10.24 mps)

10.9.13 **“No Test” conditions.** When test results are inconclusive in determining the acceptability of the PQR for the specific weld joint design**,** a “No Test” decision will be rendered. The conditions under which a "No Test" may occur are as follows:

(1) The projectile impact is not located within the prescribed limits of distance from the weld.

(2) The projectile striking velocity is below the minimum required and the weld does not develop excessive cracking.

(3) The projectile striking velocity is above the maximum allowed and the weld develops excessive cracking.

(4) The location of tile center of the impact is less than 13 ±1 in. from the top or bottom of the test sample and excessive cracking occurs including cracks extending to the closest end of the sample.

(5) Excessive cracking is developed on a corner joint sample by a third impact when more than two impacts are required.

(6) Excessive cracking is developed on a flat weldment by a second impact when more than one impact is required.

(7) Should the material forming part of the weld joint design fail in shear a “No Test” condition will be rendered on the PQR and a recommendation will be made to redesign the joint and to submit the redesigned joint for testing.

10.9.14 **Evaluation of results.** The maximum allowable accumulative total length of weld, fusion zone, or heat-affected zone cracking on both the impact side and on the opposite side, caused by a fair impact shall be 12 in. Cracking in excess of 12 in. shall be considered excessive cracking and failure. Cracks in the armor parallel to the weld and within 1/8 in. of the edge of the weld will be considered in the total cracking. Cracking of the weld area shall govern, however, if the total length of cracking in the weld area meets the acceptable limits and 12 in. of cracking occurs in an area greater than 1/8 in. from the weld, a “No Test” condition shall result (see 10.9.13). Cracking of the armor (plate, forging, extrusion) greater than 1/8 in. from the weld area shall not be a reason for rejection of the welding procedure. A fair impact shall be recorded when the test projectile impacts the target at 0° obliquity within the prescribed dimensional limits from the proper direction at a striking velocity less than the minimum required by the test, and excessive weld cracking occurs. Such an impact will be cause for rejection. In addition a fair impact shall be recorded when the projectile strikes the target at 0° obliquity within the prescribed dimensional limits from the proper direction at a striking velocity greater than the maximum required by the test; and no excessive weld cracking occurs.

10.9.15 **Retest Samples.**

10.9.15.1 **“No Test” Result.** An additional test sample shall be provided by the manufacturer when firing results are inconclusive because of “no test” impacts.

10.9.15.2 **PQR rejection.** When a supplier requests a retest of his product after an initial rejection, he shall submit two samples for firing tests. The test sample shall be prepared by the revised PQR and shall be marked in accordance with 10.6.3. Failure of either one of the retest specimens shall be cause for rejection of the PQR represented.

APPENDICES

APPENDIX A

Standard Forms

Table of Contents

Procedure Qualification Record 105
Welding Procedure Specification 107
Procedure Qualification Record for Stud Welding Applications 109
Welding Procedure Specification for Stud Welding Applications 110
Procedure Qualification Record Modified (for “grandfathered” procedures only) 111
Welding Procedure Specification Modified (for “grandfathered” procedures only) 113
Aluminum Welder Qualification Test Record 115
Weld Specification Cross Reference Matrix 116
Request For Weld Classification Change 117

PROCEDURE QUALIFICATION RECORD (PQR)

Procedure Qualification Record Number _____ **Date** _____

Process(es) 1. _____ 2. _____

1. _____ 2. _____

Design Sketch

Welding Sequence Sketch

Base Materials

Group Number _____ to _____

Alloy and Temper _____ to _____

Thickness _____ to _____

Pass Number	Process Number	Amperage	Voltage	Travel Speed

Filler Material

F-Number _____

AWS Classification _____

Diameter _____

Shielding Gas

Shielding Gas(es) _____

Percent Composition _____

Flow Rate _____

Tungsten Electrode (GTAW)

AWS Classification _____

Size _____

Type _____

Back Gouging (Yes / No) _____

Backup Material

Backup Material Type _____

M-Number and Alloy _____

Process Information

Type of Welding Power Source _____

_____

Electrode (Single / Multiple) _____

Bead Type (Stringer / Weave) _____

Welding Current (AC / DC) _____

Polarity (SP / RP) _____

Position of Welding (F,H,V,OH) _____

Initial Cleaning Procedure

Oxide Removal Method _____

Degreasing Agent _____

Interpass Cleaning Procedure

Smut Removal Method _____

Dye Penetrant Removal

Method (Describe) _____

_____

Material Temperature

Preheat Temperature _____

Interpass Temperature _____

Post Weld Heat Treatment

Original Temper _____

Final Temper _____

Temperature _____

Time _____

Quench _____

PROCEDURE QUALIFICATION RECORD (PQR)

PQR

GROOVE WELD TEST

Specimen Number	Width	Thickness	Area	Ultimate Tensile Load (LB)	Ultimate Unit Stress (PSI)	Character of Failure and Location

GUIDED BEND TEST

Type of Bend (Face/Root/Side)	Bend Jig Figure Number	Result (Pass/Fail)	Type of Bend (Face/Root/Side)	Bend Jig Figure Number	Result (Pass/Fail)

Visual Examination Results: Pass Fail

Type and Character of Failure: _____

FILLET WELD TEST or GROOVE WELD MACRO SAMPLES

Fracture Test: Pass Fail N/A Root Fusion: Yes No

Macro: Weld Size & Contour Sat. Unsat. Penetration: Sat. Unsat.

Welder's Name: _____ Clock Number _____ Stamp Number _____

Tests Conducted By: _____ Laboratory

Test Number: _____ Per: _____

We certify that the statements in this record are correct and that the test welds were prepared, welded and tested in accordance with the requirements of the UDLP/TACOM Ground Combat Vehicle Welding Code — Aluminum.

Signed by: _____
Tester

Title: _____

Date: _____

Signed by: _____
Company Representative

Title: _____

Date: _____

Signed by: _____
Government Representative

Title: _____

Date: _____

* 3 macro samples taken from test plate for qualification of partial penetration weld joint.

CWI Stamp

WELDING PROCEDURE SPECIFICATION (WPS)

Welding Procedure Specification Number **WPS** Date _____ Approved _____
Company Representative

Revision ____ Date _____ Approved _____

____ _____ _____

____ _____ _____

____ _____ _____

Supporting PQR Numbers _____ _____ _____ _____

_____ _____ _____ _____

Weld Joint Design Sketches

Base Materials

Group Number To

_____ _____

Alloy and Temper _____ To _____

_____ _____

_____ _____

Thickness _____ To _____

Filler Material

F-Number _____

AWS Classification _____

Diameter _____

Shielding Gas

Shielding Gas(es) _____

Percent Composition _____

Flow Rate _____

Material Temperature

Preheat Temperature _____

Interpass Temperature _____

Backing Material

Backing Material Type

M-Number and Alloy _____

Permanent ☐ Removed ☐

Tungsten Electrode (GTAW)

AWS Classification _____

Size _____

Type _____

Initial Cleaning Procedure

Degreasing Agent _____

OR _____

Oxide Removal Method _____

OR _____

_____

Interpass Cleaning Procedure

Smut Removal Method _____

Back Gouging (Yes / No) _____

WELDING PROCEDURE SPECIFICATION (WPS)

WPS

Post Weld Heat Treatment

Original Temper _____ Final Temper _____

Temperature _____ Time _____

Quench _____

Dye Penetrant Removal Method (Describe) _____

Welding Sequence Sketches

	Base Material Thickness				
Position of Welding					
Groove Angle					
Weld Passes (Single, Multi.)					
Amperage Range					
Voltage Range					
Travel Speed (IPM)					
Shielding Gas Cup Size					
Weld Bead Type					
Welding Process					
Welding Power Source					
Welding Current (AC/DC)					
Polarity (Straight/Reverse)					
Welding Progression					
Vertical Progression					
Number of Electrodes					
Spacing of Electrodes					

Note: The parameters listed above should be used as a guideline for welding same thickness materials, when welding dissimilar thickness' or welding out of position, the welding parameters shall be maintained within the bolded range listed above.

PROCEDURE QUALIFICATION RECORD (PQR)
FOR STUD WELDING APPLICATIONS

Procedure Qualification Record Number _____ **Date** _____

WPS No. _____ **Process** _____

Machine Settings

Power Supply Make _____

Model No. _____

Stud Gun Model _____

Timer Range Setting _____

Current/Polarity _____

Capacitance or Power Tap Setting _____

_____

Amperage Range Setting _____

Lift Setting _____

Cable Size _____ Length _____

Other _____

Stud Base Sketch

Base Materials

M-Number _____

Thickness _____ to _____

Alloy and Temper _____

Pipe or Tube Diameter _____

Alloy and Temper _____

Stud Materials

F-Number _____

Stud Diameter _____

Other _____

_____

_____

Ferrules

Ferrule Material _____

Ferrule Specification _____

Ferrule Description _____

_____

_____

Shielding Gas

Shielding Gas(es) _____

Percent Composition _____

Flow Rate _____

Other _____

_____

Cleaning

Initial Oxide Cleaning _____

_____

Initial Oil & Dirt Cleaning _____

_____

Other

Welding Position _____

Wetting Agent _____

Ferrule Description _____

_____

Test Results	Visual Acceptance	Bend Test	Tension Test Option No. 1	Tension Test Option No. 2
Stud No. 1				
Stud No. 2				
Stud No. 3				
Stud No. 4				
Stud No. 5				
Stud No. 6				
Stud No. 7				
Stud No. 8				
Stud No. 9				
Stud No. 10				

We certify that the statements in this record are correct and that the test welds were prepared, welded and tested in accordance with the requirements of the UDLP/TACOM Ground Combat Vehicle Welding Code — Aluminum.

Signed by: _____
Tester

Title: _____

Date: _____

Stamp

Signed by: _____
Company Representative

Title: _____

Date: _____

Signed by: _____
Government Representative

Title: _____

Date: _____

WELDING PROCEDURE SPECIFICATION (WPS)
FOR STUD WELDING APPLICATIONS

Welding Procedure Specification Number **WPS** Date _____ Approved _____
Company Representative

Revision ____ Date _____ Approved _____

Supporting PQR Numbers _____ _____ _____ _____

Joints

Stud Base Sketch

Base Metals

M-No. _____ Specification _____

Thickness _____ to _____

Alloy and Temper _____

Pipe or Tube Diameter _____

Alloy and Temper _____

Stud Materials

F-No. _____ Specification _____

Stud Diameter _____

Other _____

Welding Process

Arc Stud Welding _____

Capacitor Discharge _____

Contact Method

Gap Method _____

Drawn Arc Method _____

Shielding Gas

Shielding Gas(es) _____

Percent Composition _____

Flow Rate _____

Other _____

Cleaning

Initial Oxide Cleaning _____

Initial Oil & Dirt Cleaning _____

Ferrules

Ferrule Material _____

Ferrule Specification _____

Ferrule Description _____

Machine Information and Settings

Power Supply Make _____

Stud Gun Model _____

Current/Polarity _____

Amperage Range Setting _____

Stud-to-work Distance _____

Lift Setting _____

Cable Size _____ Length _____

Model No. _____

Timer Range Setting _____

Capacitance or Power Tap Setting _____

Other _____

STUDWPS.DOC

PROCEDURE QUALIFICATION RECORD (PQR) *MODIFIED*

Procedure Qualification Record Number _____ Date _____

Process(es) 1. _____ 2. _____

1. _____ 2. _____

Design Sketch

Welding Sequence Sketch

Base Materials

Group Number _____ to _____

Alloy and Temper _____ to _____

Thickness _____ to _____

Filler Material

F-Number _____

AWS Classification _____

Diameter _____

Pass Number	Process Number	Amperage	Voltage	Travel Speed

Shielding Gas

Shielding Gas(es) _____

Percent Composition _____

Flow Rate _____

Tungsten Electrode (GTAW)

AWS Classification _____

Size _____

Type _____

Back Gouging (Yes / No) _____

Backup Material

Backup Material Type _____

M-Number and Alloy _____

Process Information

Type of Welding Power Source _____

_____

Electrode (Single / Multiple) _____

Bead Type (Stringer / Weave) _____

Welding Current (AC / DC) _____

Polarity (SP / RP) _____

Position of Welding (F,H,V,OH) _____

Initial Cleaning Procedure

Oxide Removal Method _____

Degreasing Agent _____

Interpass Cleaning Procedure

Smut Removal Method _____

Dye Penetrant Removal

Method (Describe) _____

_____

Material Temperature

Preheat Temperature _____

Interpass Temperature _____

Post Weld Heat Treatment

Original Temper _____

Final Temper _____

Temperature _____

Time _____

Quench _____

PROCEDURE QUALIFICATION RECORD (PQR) *MODIFIED*

GROOVE WELD TEST

Specimen Number	Width	Thickness	Area	Ultimate Tensile Load (LB)	Ultimate Unit Stress (PSI)	Character of Failure and Location

GUIDED BEND TEST

Type of Bend (Face/Root/Side)	Bend Jig Figure Number	Result (Pass/Fail)	Type of Bend (Face/Root/Side)	Bend Jig Figure Number	Result (Pass/Fail)

Visual Examination Results: Pass Fail

Type and Character of Failure: _____

FILLET WELD TEST

Fracture Test: Pass Fail Root Fusion: Yes No

Macro: Weld Size & Contour Sat. Unsat. Penetration: Sat. Unsat.

Welder's Name: _____ Clock Number _____ Stamp Number _____

Tests Conducted By: _____ Laboratory

Test Number: _____ Per: _____

We certify that the statements in this record are correct and that the test welds were prepared, welded and tested in accordance with the requirements of MIL-STD-372 and/or MIL-STD-1946.

Signed by: _____
Tester

Title: _____

Date: _____

CWI Stamp

Signed by: _____
Company Representative

Title: _____

Date: _____

Signed by: _____
Government Representative

Title: _____

Date: _____

WELDING PROCEDURE SPECIFICATION (WPS) *MODIFIED*

Welding Procedure Specification Number **WPS** Date _____ Approved _____
United Defense LP Weld Engineering Representative

Revision ____ Date _____ Approved _____

Supporting PQR Numbers _____ _____ _____ _____

Weld Joint Design Sketches

Base Materials

Group Number _____ To _____

Alloy and Temper _____ To _____

Thickness _____ To _____

Filler Material

F-Number _____

AWS Classification _____

Diameter _____

Shielding Gas

Shielding Gas(es) _____

Percent Composition _____

Flow Rate _____

Material Temperature

Preheat Temperature _____

Interpass Temperature _____

Backing Material

Backing Material Type _____

M-Number and Alloy _____

Permanent ☐ Removed ☐

Tungsten Electrode (GTAW)

AWS Classification _____

Size _____

Type _____

Initial Cleaning Procedure

Degreasing Agent _____

OR _____

Oxide Removal Method _____

OR _____

Interpass Cleaning Procedure

Smut Removal Method _____

Back Gouging

(Yes / No) _____

WELDING PROCEDURE SPECIFICATION (WPS) *MODIFIED*

WPS

Post Weld Heat Treatment

Original Temper _____ Final Temper _____

Temperature _____ Time _____

Quench _____

Dye Penetrant Removal Method (Describe) _____

Welding Sequence Sketches

	Base Material Thickness				
Position of Welding					
Groove Angle					
Weld Passes (Single, Multi.)					
Amperage Range					
Voltage Range					
Travel Speed (IPM)					
Shielding Gas Cup Size					
Weld Bead Type					
Welding Process					
Welding Power Source					
Welding Current (AC/DC)					
Polarity (Straight/Reverse)					
Welding Progression					
Vertical Progression					
Number of Electrodes					
Spacing of Electrodes					

Note: The parameters listed above should be used as a guideline for welding same thickness materials, when welding dissimilar thickness' or welding out of position, the welding parameters shall be maintained within the bolded range listed above.

ALUMINUM WELDER QUALIFICATION TEST RECORD

Company Name _____ Company Location _____ Test ID No. _____

Name _____ Badge No. _____ Date _____

Welding Process _____ ☐ Manual ☐ Semiautomatic ☐ Mechanized

Material Number _____ Alloy _____ to _____ Thickness _____

Filler Metal Specification _____ Class _____ Diameter _____

Position ☐ 1G ☐ 2G ☐ 3G (up) ☐ 4G Backing material _____

In accordance with procedure specification no. _____

Retest ☐ Yes ☐ No If a retest, was further training or practice provided? ☐ Yes ☐ No

VISUAL INSPECTION

Accept	Reject		Accept	Reject	
☐	☐	Cracks	☐	☐	0.1” max. Underfill
☐	☐	Craters Filled	☐	☐	Reinforcement
☐	☐	Smooth Weld/Base Transition			

RADIOGRAPHIC INSPECTION

Test/Film ID No.	Results	Remarks
	☐ Accept ☐ Reject	

Radiographer _____ Date _____

GUIDED BEND TEST

Specimen type	Thickness, in.	Results	Remarks
		☐ Accept ☐ Reject ☐ Accept ☐ Reject ☐ Accept ☐ Reject ☐ Accept ☐ Reject	

I certify that the statements in this record are correct and that the test welds were prepared, welded, and tested in accordance with the requirements of the UDLP/TACOM Ground Combat Vehicle Welding Code-Aluminum.

Signed by _____
Test Administrator

Title _____

Date _____

CWI Stamp

WELD SPECIFICATION CROSS REFERENCE MATRIX

Previous Specification		UDLP/TACOM Weld Code
MIL-STD-370	Grade A (SP)	Section 10 (Other requirements as
	Grade A	Section 10
	Grade B	Section 9
	Grade C	Section 8
MIL-STD-372	Class A	Section 9
	Class B	Section 8
MIL-STD-1946	Armor to Armor	Section 10
	Attachments to Armor	Section 8
MIL-W-45205	Class A	Section 9
	Class B	Section 8
MIL-W-45206	Armor to Armor	Section 10
	Attachments to Armor	Section 8
MIL-STD-45211	Stud Welding	Section 7
Drawing 12309000	Level 1A	Section 9
	Level 1C	Section 10
	Level 2A	Section 8
	Level 2C	Section 10
	Level 3B	Section 8
	Level 3C	Section 8
	Level 4B	Section 8 (Other requirements as
	Level 4C	Section 8 (Other requirements as
	Level 4D	Section 7

UDLP/TACOM Weld Code	Previous Specification	
Section 7	MIL-W-45211	
	Drawing 12309000	Level 4D
Section 8	MIL-STD-370	Grade C
	MIL-STD-372	Class B
	MIL-STD-1946	(Attachments to armor only!)
	MIL-W-45205	Class B
	MIL-W-45206	(Attachments to armor only!)
	Drawing 12309000	Level 2A
	Drawing 12309000	Level 3B
	Drawing 12309000	Level 3C
	Drawing 12309000	Level 4B (Other requirements as
	Drawing 12309000	Level 4C (Other requirements as
Section 9	MIL-STD-370	Grade B
	MIL-STD-372	Class A
	MIL-W-45205	Class A
	Drawing 12309000	Level 1A
Section 10	MIL-STD-370	Grade A (SP) (Other requirements as specified.)
	MIL-STD-370	Grade A
	MIL-STD-1946	
	MIL-W-45206	
	Drawing 12309000	Level 1C
	Drawing 12309000	Level 2C

WCC# _____

REQUEST FOR WELD CLASSIFICATION CHANGE

Submittal Date: _____
Effectivity Date: _____

Vehicle Program _____

Drawing Number _____ Drawing Revision _____

Drawing Sheet Number _____ Drawing Zone _____

Weld Symbol(s) Effected _____

Current Classification _____ Recommended Classification _____

Reason/Description for Change

Submitted By: _____ Date: _____

Approved By: _____ Date: _____

Approved By Default: _____ Date: _____

This change is formally submitted to the government for review and approval. The change will be incorporated unless United Defense POC is notified by the Government within fifteen (15) working days from the time of receipt.

APPENDIX B

Weld Types

APPLICABLE WELD TYPES AND WELD JOINT CRITERIA

Weld types may be in any combination. Drawing requirements supercede the dimensions shown below.

GROOVE WELD TYPES

V–Grooves
See Notes A, B, C and E

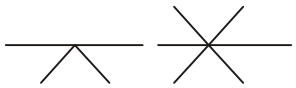

Bevel Grooves
See Notes A, B, C and E

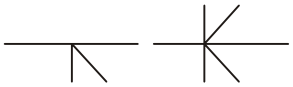

Square Grooves
See Notes A (1) and E

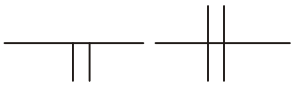

Flare Bevels
See Notes E and F

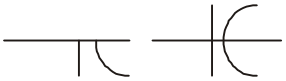

Flare V
See Notes E and F

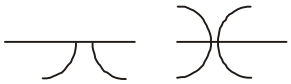

J – Groove
See Notes A(1), A(2), B, C, D(1) and E

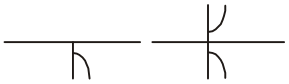

U – Groove
See Notes A(1), A(2), B, C, D(2) and E

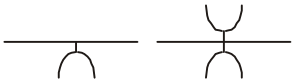

NON-GROOVE WELD TYPES

Plug/Slot Welds
See Notes E and G

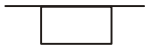

Surfacing
See Note E

Fillets
See Notes A(1) and E

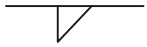

Back or
Backing Welds

Flange Edge
Flange Corner
See Notes A(1), E and F

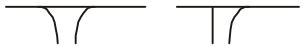

Notes:

A. Maximum Root Opening:
   (1) Open Root — .090"
   (2) With Permanent Backing — .375"
   (3) Slip-fit Joints — .3125"

B. Maximum Root Face
   1/8" or as specified on drawing

C. Minimum Included Angle
   As specified on the applicable WPS. Otherwise, 60º

D. Root Radius
   (1) .375″ minimum
   (2) .250″ minimum

E. Base Metal Thickness Range
   As specified on the applicable WPS

F. Included angles dependent upon material geometry

G. Plug weld base metal thickness

Material Thickness	Minimum Hole Diameter or Slot Width
less than 1/8"	3T
1/8" or greater	2.5T