DRAWING SIZE C

REVISIONS				
MODEL REV	DRAW REV	DESCRIPTION	DATE(YEAR-MO-DA)	APPROVED
N/A	-	NOR G2S9193 / 1993-02-02 (ECP G3S4431 / 1993-10-18)	1995-11-08	RES
-	A	NOR L1S3059 / 2001-11-14 (ECP L2S3020 / 2002-05-02)	2002-06-21	JDK

NOTES

1. SURFACE FINISH IS 125.
2. MATERIAL: STEEL, CORROSION RESISTING, TYPE 303 PER ASTM A582.
3. BREAK SHARP EDGES .005 MAX.
4. MIL-W-13855 AND ANSI Y14.5-1973 APPLY.
5. QUALITY ASSURANCE PROVISION REQUIREMENTS PER DRAWING 12993884 APPLY.

204 II V — WORKMANSHIP (PER MIL-W-63150)

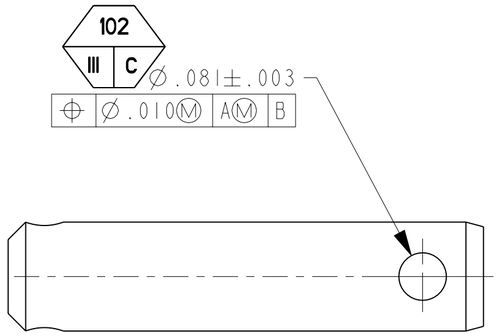

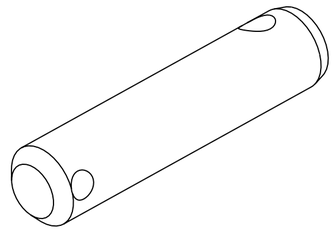

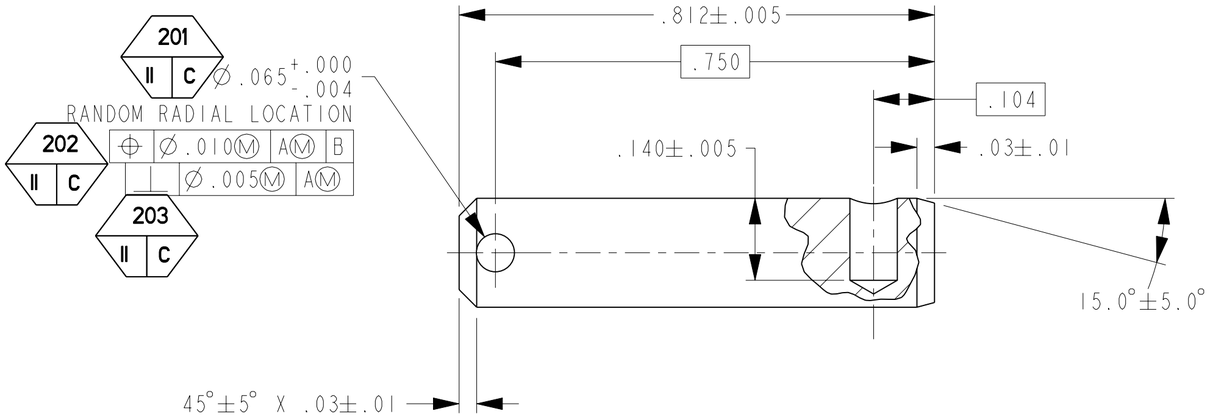

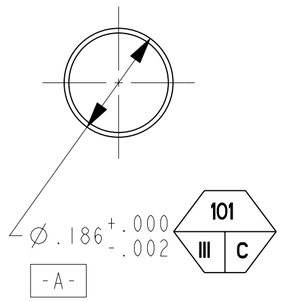

DISTRIBUTION STATEMENT A:
APPROVED FOR PUBLIC RELEASE; DISTRIBUTION IS UNLIMITED

PART NO. 12938264

PMIC			DO NOT SCALE DRAWING
MECHANICAL PROPERTIES			UNLESS OTHERWISE SPECIFIED DIMENSIONS ARE IN INCHES
YP			TOLERANCE ON ANGLES ± °
TS			2 PLACE DECIMALS ±
EL2			3 PLACE DECIMALS ±
RA			THIRD ANGLE PROJECTION
BH		12938263	MK19 GMG
RH		NEXT ASSY	USED ON
		APPLICATION	MATL ENGR / MODELED BY J. KREIDER

CONTRACT NUMBER			
CONTRACTOR			
DRAWN BY J. KREIDER		DATE(YEAR-MO-DA) 1992-09-30	
CHECKER (REQUIRED)		ENGINEER R.E. SMITH	
ENGINEER		QUALITY ENGINEER R. NAIR	
DRAWING APPROVAL L. BRUNTON	2001-11-14		
DESIGN APPROVAL R. ELBE	2001-11-14		

DESIGN ACTIVITY
US ARMY
ARMAMENT RESEARCH, DEVELOPMENT AND ENGINEERING CENTER
PICATINNY ARSENAL, NEW JERSEY 07806-5000

PIN, RETAINING

SIZE	CAGE CODE	DWG NO.
C	19200	12938264

SCALE 1:1 | UNIT WT. | SHEET 1 OF 1

FORMAT: C_TACOM_ENG_1_0